TECHNICAL MANUAL

PETRA® Slab Hanger

Hollow-Core Support for Slab Openings

Version: PEIKKO GROUP 09/2016

peikko®

PETRA

Support for Hollow-Core Slabs Around Floor Openings

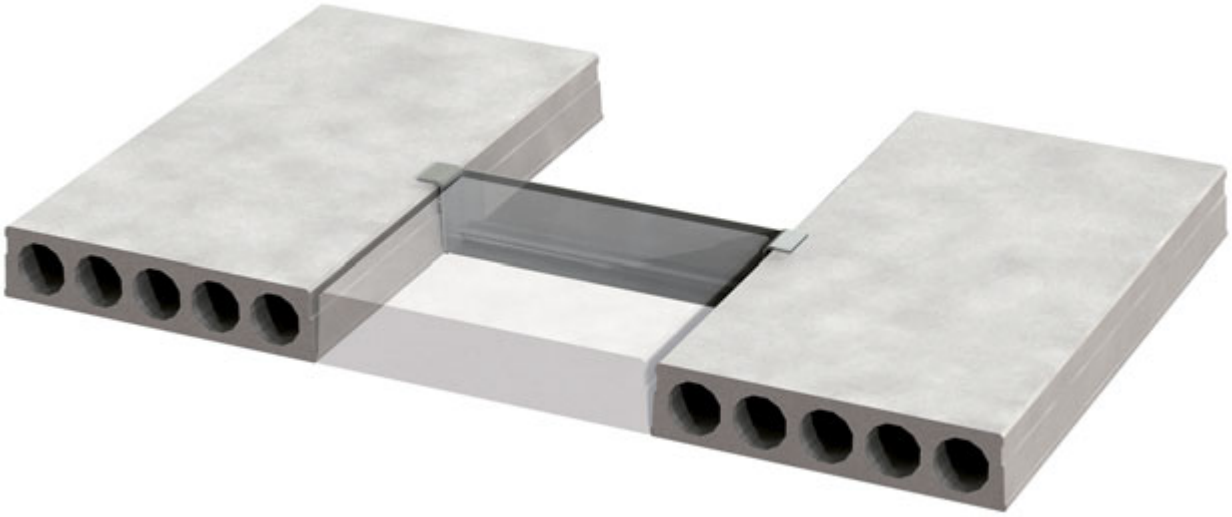

Create openings in hollow-core slab floor with PETRA

- Readily available solution
- No need for propping during installation
- Install floor slabs in one go

PETRA is used to support hollow-core slabs around floor openings. Creating larger openings in such floors traditionally requires reinforced concrete beams to be cast to support shorter slabs around the opening.

To be able to cast such beams, the short slab must be propped during installation. These additional operations can be avoided by using PETRA, which is designed to support short slabs without propping, even during assembly. PETRA enables short slabs to be installed fluently at the same time as other floor slabs.

PETRA is a unique technical solution that has all the benefits of a standardized product (pre-designed structural properties validated by Technical Approvals, guarantee of high quality of manufacturing) while being used for applications that usually require careful static analysis and tailor-made structural solutions.

Contents

1. Product properties

PETRA consists of an L-shaped steel front plate welded together with side plates. PETRA is usually hung on two parallel slabs, while one or more slabs are supported by the front plate (*Figure 1*).

Figure 1. Typical layout of a hollow-core floor with PETRA (view from top).

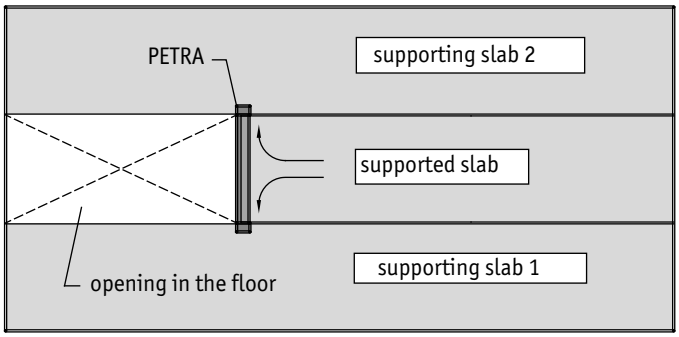

PETRA is available in several standard models that are pre-dimensioned to ensure that their shape and resistances are compatible with the properties of the majority of hollow-core slabs available on the European market. PETRA is designed to support slabs during assembly, in normal use situations, and in the event of fire without the need for temporary supports or propping.

The appropriate model of PETRA to be used in a project may be selected using the design diagrams available in this Technical Manual. The resistance curves have been determined by a design method that conforms to the principles of EN Eurocodes. If existing standard models may not be used (special structural or load conditions), Peikko's Customer Engineering Office may design special PETRA solutions.

1.1 Structural behavior

From the structural point of view, PETRA acts as a linear support to the hollow-core slab(s) at the edge of the opening. Since the structural behavior and performance of the slab hanger depend not only on the properties of PETRA but also on its interaction with the hollow-core slabs, the load-bearing mechanism developed by PETRA will be subsequently referred to in this document as a "trimmer beam". The trimmer beam carries the reaction of the supported slab and transfers it to the supporting elements, which are most often parallel supporting slabs.

The static behavior of the trimmer beam formed by the PETRA slab hanger varies in the different stages of the life cycle of the structure.

During assembly, PETRA is considered to be loaded only by the self-weight of the supported hollow-core slab. Since lateral joints between slabs are not grouted at this point, the supported slab acts as a simply supported beam with PETRA as one of the supports. The load carried by PETRA is then determined according to *Figure 2* as:

$$g_{HC,R} = \frac{g_{HC} \cdot L_0}{2}$$

where g_{HC} is the self-weight of the supported slab [kN/m²].

Figure 2. Load distribution during assembly.

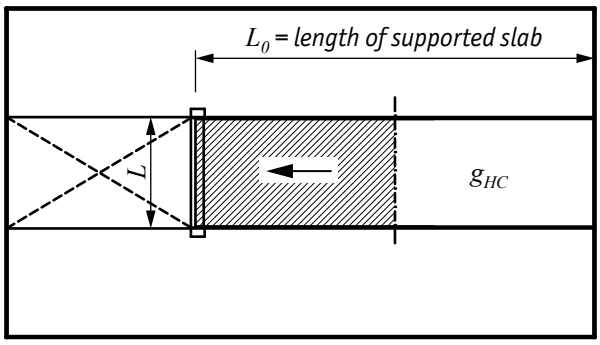

The resultant of this load is situated outside of the shear center of PETRA and causes torsion of the front plate (*Figure 3*). Since PETRA is considered to be un-propped, it is the capacity of the front plate to withstand torsion during assembly that determines the maximum length of the supported slab.

Figure 3. Torsion of the front plate.

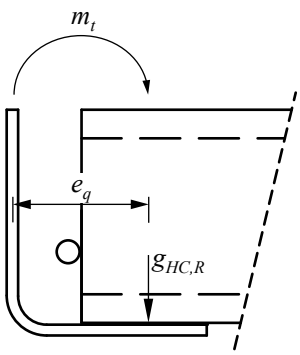

Before the structure is taken into normal use, the lateral joints between the hollow-core slabs must be grouted and hardened. Thereafter, it is possible to consider transverse distribution of loads between hollow-core slabs. This type of analysis is allowed by Annex C of the European Standard for hollow-core slabs (EN 1168) under the condition that the horizontal displacements of the hollow-core floor are restricted by the following:

- Adjacent structural parts
- Friction in supports
- Friction in lateral joints
- Ring reinforcement
- Concrete topping with mesh reinforcement

If at least one of the aforementioned requirements is satisfied, it may be considered that PETRA need only carry part of the imposed load situated within a triangular area as shown in *Figure 4*.

During a fire, the front plate of PETRA is directly exposed to fire without any additional fire protection. For this reason, the resistance of the front plate is neglected in fire design. The structural action of the front plate is replaced by a reinforced concrete beam formed by coupling the additional fire rebar with the compressed concrete of the joint grouting (*Figure 5*). The resistance of trimmer beams for standard types of PETRA may be obtained from the design diagrams in Annex A of this Technical Manual. The load-bearing behavior of the reinforced concrete end beam is guaranteed for structures with fire resistance class R60. For structures with higher fire resistance classes, adequate fire protection must be provided to the surface of the front plate directly exposed to fire.

In special cases, for instance when the designer of the hollow-core floor is able to guarantee that the hollow-core floor keeps its transverse stiffness under the conditions mentioned above, including in the event of a fire, the loads from the supported slab will be transferred to supporting slabs by lateral joints. Under such conditions, PETRA models without fire rebars may also be used. At the same time, it is always recommended that models with fire rebars be used in the following cases:

- PETRA carries direct linear or point load
- PETRA supports two or more hollow-core slabs

Figure 4. Load distribution during normal use.

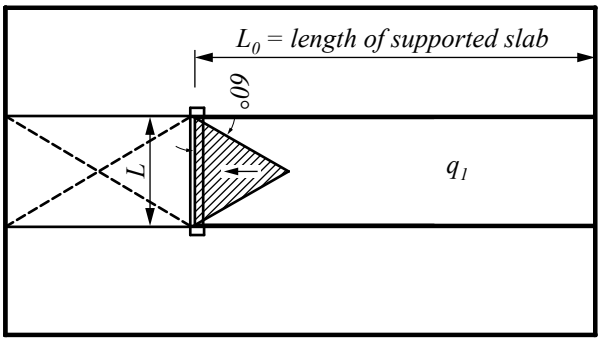

Figure 5. Reinforced concrete mechanism during fire.

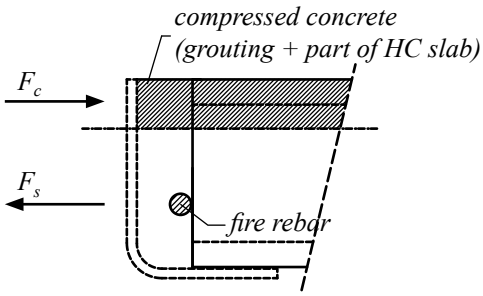

1.2 Application conditions

1.2.1 Loading and environmental conditions

The standard PETRAs are designed to carry static loads. For dynamic and fatigue loads, individual designs must be made.

PETRA is designed for use indoors and in dry conditions. When using PETRA in other conditions, the surface treatment must be adequate according to the environmental exposure class and intended operating life.

1.2.2 Hollow-core slabs

The reactions from PETRA are transferred to supporting slabs over a relatively small area of the side plates. The resistance of the supporting slab to such a point load should be verified by the designer of the hollow-core floor (especially with small hollow-core slabs or when there are openings in the supporting hollow-core slab).

The reaction transmitted by the side plates should be calculated using the load distribution models presented in section 1.2. If triangular distribution of the imposed load (see *Figure 4*) may be considered, the design value of the vertical reaction in the side plate of PETRA is:

$$V_{Ed} = \gamma_G \left(g_{HC} \frac{L_0 L}{4} \right) + \gamma_Q \left(0.217 L^2 q_1 \right)$$

where

q_1 is the imposed load (kN/m²)
g_{HC} is the self-weight of the supported slab (kN/m²)
L is the length of the PETRA (mm)
L_0 is the length of the supported slab (mm)
γ_G, γ_Q are partial safety factors for permanent and imposed load.

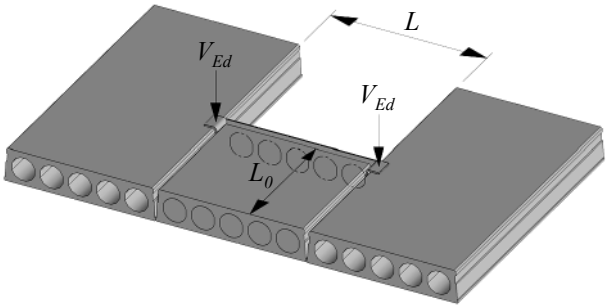

The shape of PETRA is optimized for use with the majority of hollow-core slabs produced in European countries. The maximum bearing lengths provided by PETRA are shown in *Table 1* and should satisfy requirements for minimum bearing length specified in the type approval of the hollow-core slab.

Table 1. Maximum bearing lengths provided by PETRA [mm].

Depth of the supported slab [mm]	o_t [mm]
$h_f \leq 200$	80
$h_f > 200$	100

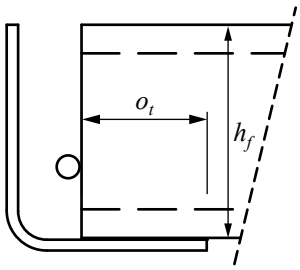

The width of lateral joints between hollow-core slabs must be within the limits indicated in *Table 2* to avoid cases illustrated in *Figure 6*.

Figure 6. Limits for widths of lateral joints.

a) Joint is too narrow – the side plate interferes with the upper edge of the supporting slab.

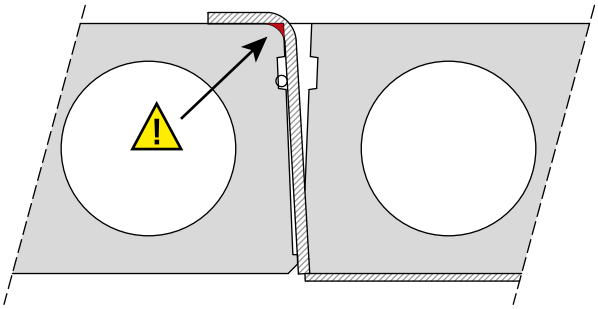

b) Joint is too wide – the bearing length of the side plate is not sufficient.

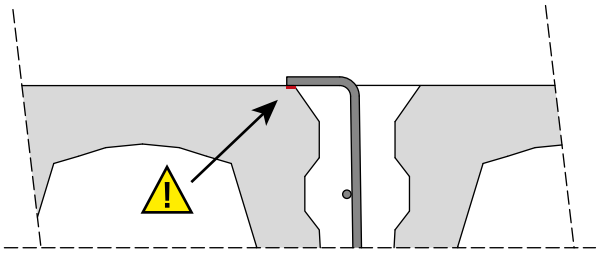

Table 2. Limits for widths of lateral joints.

Depth of the supporting slab [mm]	b [mm]	
	min	max
$h_s \leq 200$	50	70
$200 < h_s \leq 300$	50	70
$300 < h_s \leq 500$	50	65

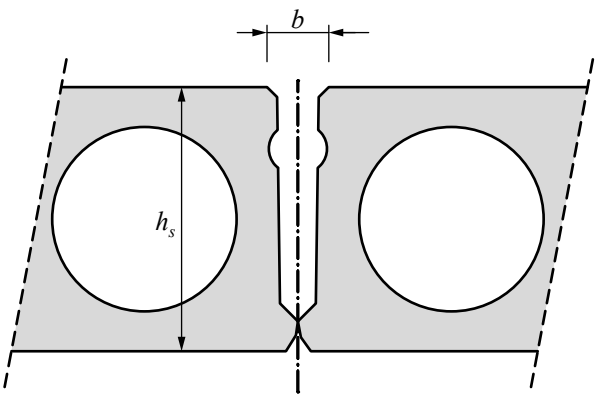

If the requirements concerning bearing length and width of joint of the hollow-core slab are different from those indicated in *Table 1* and *Table 2*, Peikko's Customer Engineering Office will design a PETRA part with a special shape.

1.2.3 Positioning of PETRA

When determining the position of PETRA and the length of the supported slab, bear in mind that the minimum distance between the edge of the opening in the floor and the supported slab is 51 mm for PETRA parts with a front plate of depth $h_f \leq 200$ mm and 57 mm for other PETRAs (*Figure 7*).

If short PETRA parts ($L < 1200$ mm) are used without fire rebar, the arrangement between the supported slab and the edge of the opening should be as shown in *Figure 8*.

Figure 7. Position of supported slab (PETRA with fire reinforcement).

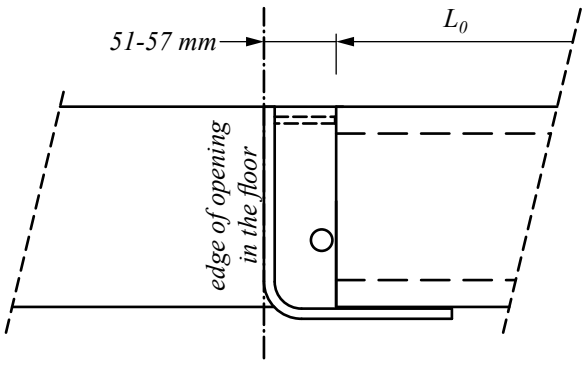

Figure 8. Position of supported slab (PETRA without fire reinforcement).

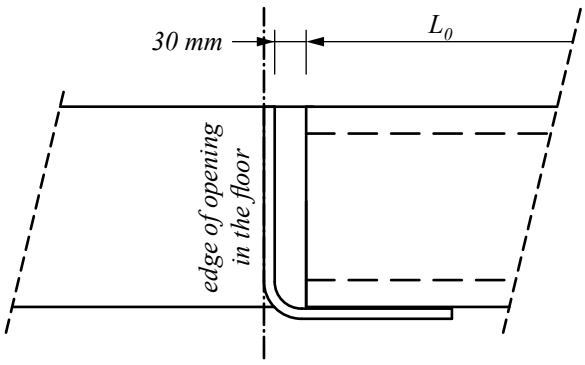

1.3 Other properties

PETRA slab hangers are fabricated from steel plates and reinforcement bars with the following material properties:

Plates S355J2+N	EN 10025-2 (front plate)
S355MC	EN 10149-2 (side plates)
Rebars B500B	EN 10080, SFS 1268
BSt 500S	DIN 488
A500HW	EN 10080, SFS 1215

The final product is shaped and assembled by the following procedures:

Plates	Flame or mechanical cutting and bending
Rebars	Mechanical cutting
Welding	MAG by hand or with a robot
Welding class C	(SFS-EN ISO 5817)

Peikko Group's production units are externally controlled and periodically audited on the basis of production certifications and product approvals by various organizations, including Inspecta Certification, VTT Expert Services, Nordcert, SLV, TSUS and SPSC among others.

The shape and dimensions of PETRA depend on the layout of the hollow-core floor. The length of the front plate is determined by the width of the opening in the hollow-core floor. The depth of the front plate corresponds to the depth of the supported slab; the depth of the side plates corresponds to the depth of the supporting slabs. If the depth of the supporting slabs is the same as the depth of the supported slab, PETRA is symmetrical. In other cases, non-symmetrical PETRA parts must be used. In special cases (for example when PETRA is supported by a wall), the side plate may be straight. The standard dimensions of structural parts of PETRA are indicated in *Table 3*.

Figure 9. Examples of PETRA slab hangers.

a) basic types of PETRA.

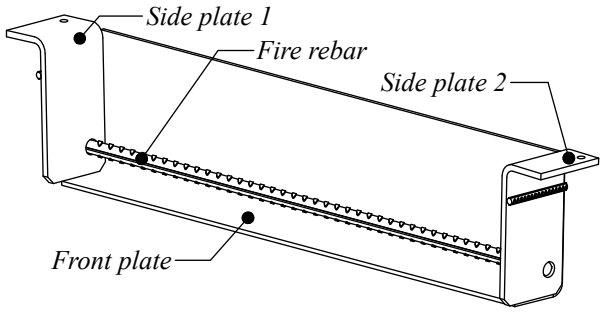

b) side plate variation.

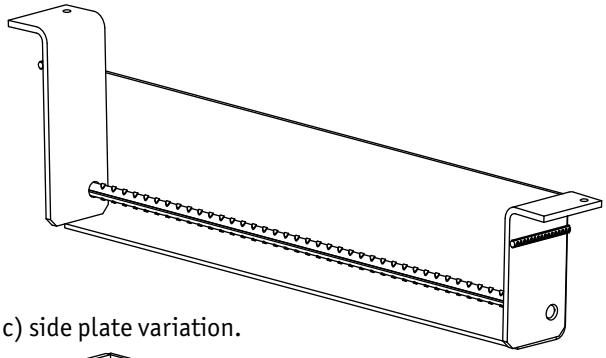

c) side plate variation.

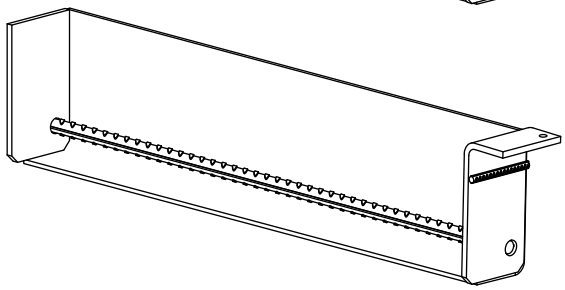

Table 3. Dimensions of standard parts of symmetric PETRA (the depth of supported and supporting slabs are equal).

Depth of slabs [mm]	Front plate	Side plate	
	Width b_1 [mm]	Length L_2 [mm]	Width b_2 [mm]
150	140	150	100
175	140	150	100
200	140	150	100
220	160	170	100
265	160	170	100
300	160	170	100
320	160	170	100
350	160	170	100
370	160	170	100
400	160	170	100
450	160	170	100
500	160	170	100
Manufacturing tolerances	±2	±2	±2

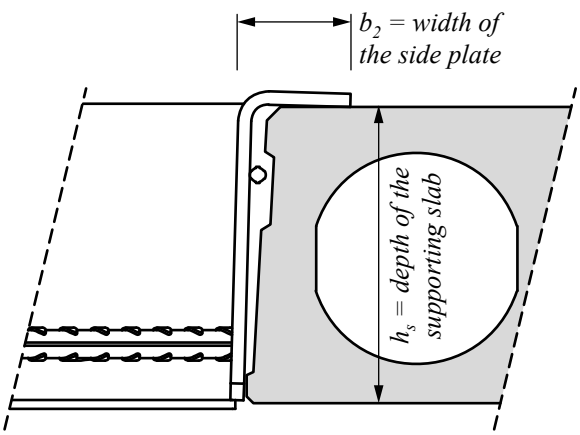

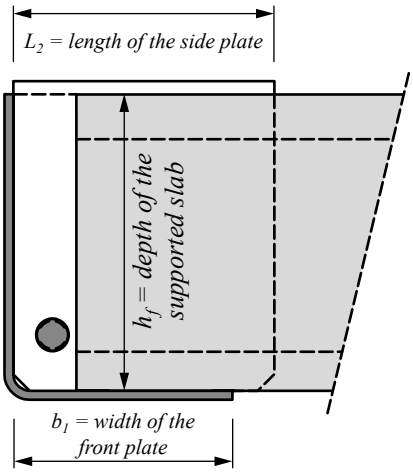

2. Resistances

The resistances of the trimmer beam developed with PETRA are verified according to a design concept based on the principles of EN Eurocodes. Each PETRA is available in two models:

- PETRA: used to support slabs of length 4–6 m
- PETRA strong: used to support longer slabs or slabs with high imposed loads

Besides these models, PETRA 175 and PETRA 200 are also available as model PETRA recesses: models used in bathroom floors or other applications requiring ducting. PETRA recess has resistances superior to those of PETRA strong. The resistances of trimmer beams with standard models of PETRA may be verified using the design diagrams in Annex A of this Technical Manual. In special cases, individual designs may be provided by the Peikko Customer Engineering Office. The basic principles of the design concept used for the development of design diagrams for standard PETRA models are presented hereafter.

The design values of actions on PETRA are determined by global analysis following the design assumptions described under "Structural behavior" in this Technical Manual. The design values of loads are determined according to standard EN 1990. During assembly, only actions resulting from the self-weight of the hollow-core slab are considered:

$$E_d = \gamma_G \cdot G$$

where E_d is the design value of actions and G are actions resulting from linear reaction g_{HC}. During normal use, the load combination is:

$$E_d = \gamma_G \cdot G + \gamma_Q \cdot Q$$

where Q is the sum of actions resulting from imposed loads. The partial safety factors γ_G = 1.35, γ_Q = 1.50 are recommended values from Table A1.2 of EN 1990:2002. During a fire, the load combination acting on PETRA is:

$$E_d = G + \psi_{2.1} \cdot Q$$

where the combination factor $\psi_{2.1}$ should be taken from A1.1 of EN 1990:2002.

The resistances of all of the components of the trimmer beam formed by PETRA against relevant failure modes are verified by:

$$E_d \leq R_d$$

where E_d is the design value of actions determined by global analysis and R_d is the design value of resistance of the components determined according to

EN 1993-1-1:2005 for steel elements
EN 1992-1-1:2004 for concrete elements

The design diagrams of PETRA give the values of maximum imposed load as a function of the length and weight of the supported slab g_{HC}. If other permanent loads Δg (such as concrete topping) act on the hollow-core slab before the lateral joints between the slabs are hardened, the total permanent load should be taken as $g_{HC}+\sum\Delta g$.

If partial factors for loads are different than those indicated on the design diagrams, the maximum imposed load on PETRA is obtained as:

$$q^{NA} = \frac{\left(1.35 - \gamma_G^{NA}\right) g_{HC} + 1.5 q_k}{\gamma_Q^{NA}}$$

where

q_k is the load capacity obtained from design diagrams

$\gamma_G^{NA}; \gamma_Q^{NA}$ are the partial factors determined according to National Annexes

Individual designs will be made by Peikko's Customer Engineering Office in the following cases:

- Load distribution models in the hollow-core floor are different than those assumed for standard PETRAs
- PETRAs with high lengths (L > 2400 mm)
- PETRAs carrying direct linear or point loads

Selecting PETRA

The following models of PETRA are available as standard:

- **PETRA**
- **PETRA strong**
- **PETRA recess** (available only for PETRA 175 and PETRA 200)

If it is not possible to use the standard models of PETRA (the resistance of standard models is not sufficient or the structural conditions of the hollow-core floor differ from those assumed in the design of standard PETRA models), Peikko's Customer Engineering Office will provide you with solution:

- **PETRA special**

The shape of PETRA to be used is determined according to the geometry of the opening and depth of hollow-core slabs. Thereafter, the resistance of standard resistance models may be verified using the design diagrams in Annex A of this Technical Manual. After selecting the shape and model of PETRA, a code describing the product may be composed according to the rules described in *Figure 10*. This code can be used when ordering the product from Peikko's Sales Service.

Figure 10. Product code of PETRA.

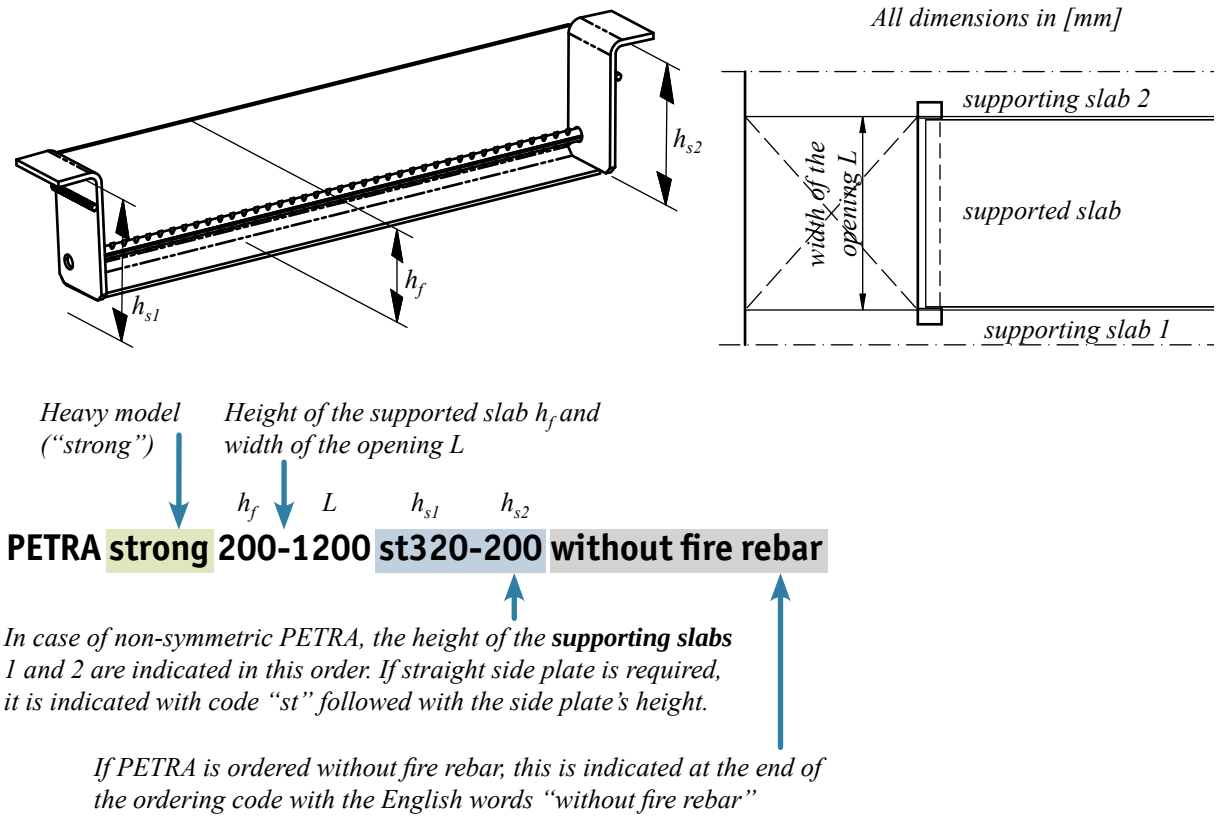

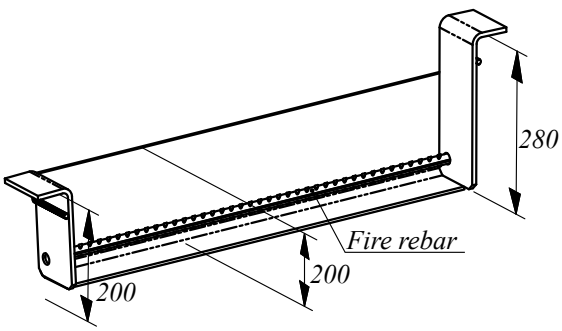

Parts of product code marked with green, blue and grey are optional and independent from one another.

On the left:
Width of the opening L = 1200

PETRA 200-1200 200-280

Examples of Product codes are shown in *Figure 11*

Figure 11. Examples of product codes.

Basic types of PETRA: side plates are L-shaped and are as high as the front plate. There is no need to define side plates.

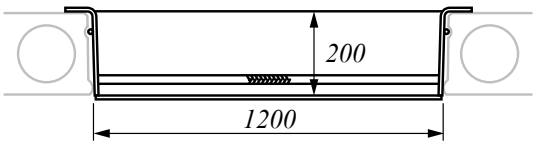

PETRA 200-1200

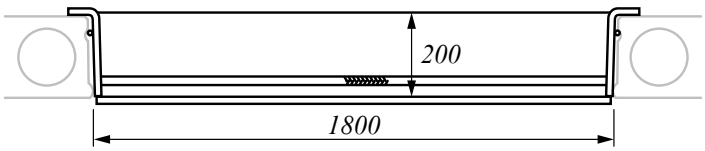

PETRA strong 200-1800

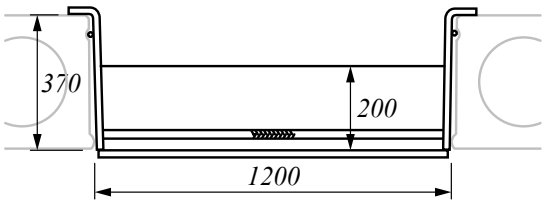

PETRA recess 200-1200 370-370

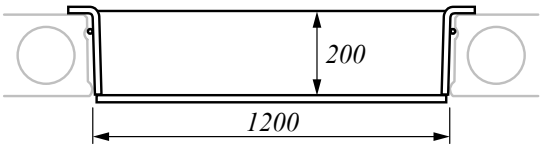

PETRA strong 200-1200 without fire rebar

Side plate variations: both side plates must be defined.

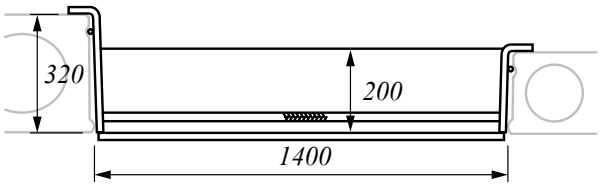

PETRA strong 200-1400 320-200

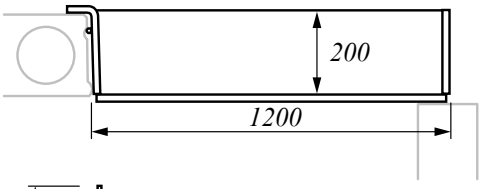

PETRA strong 200-1200 200-st200 without fire rebar

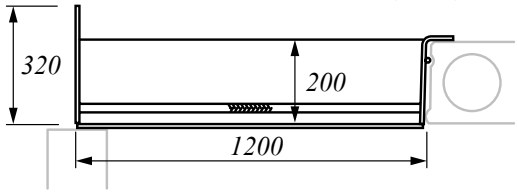

PETRA 200-1200 st320-200

If PETRA Special must be designed, please provide relevant information about the project to the Peikko Sales Service using the design form in Annex B of this Technical Manual.

See *Figure 12* for more information about the process of selection and ordering PETRA.

Figure 12. Selecting and ordering PETRA.

Standard design situation
- Standard design assumptions
- L ≤ 2400 mm
- Only uniformly distributed load

Properties of product:
- Load bearing resistance (according to Annex A)
- Geometry (*Table 2* + *Table 3*)

OK

Select PETRA: (*Figure 10*)
- Select a model according to loads and geometry:
  - PETRA
  - PETRA strong
  - PETRA recess
- Check the required heights and shapes of side plates: basic type of PETRA or side plate variations
- Select a model according to the global behavior of the hollow-core floor (chapter 1.2): with or without fire rebar

NOT OK

Non-standard design situation
- Different to standard:
  - Load distributions
  - Partial factors
  - Self-weight of slab
- L > 2400 mm
- Point load or linear load on hanger

Contact Peikko technical support:
- Fill in the design form found in Annex B or download it from our webpage to order PETRA special and send it to Peikko's Customer Engineering Office. It is possible to add L-profiles to the back of the front plate. The L-profiles can be defined using the special design form

Peikko will:
- Design your PETRA special
- Give a unique name and ID code to the product
- Instruct you to use this given name and ID code in your design drawings
- Make a shop drawing

Place an order with the given name and ID code

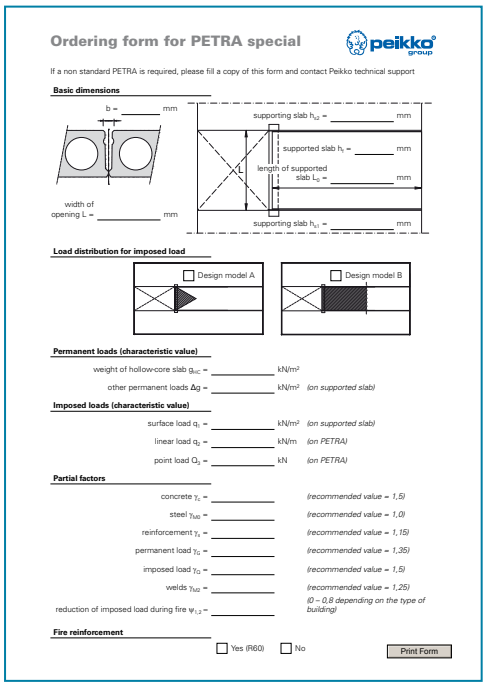

Ordering form for PETRA special peikko group

If a non standard PETRA is required, please fill a copy of this form and contact Peikko technical support

Basic dimensions

b = _____ mm

width of opening L = _____ mm

supporting slab h_{s2} = _____ mm

supported slab h_s = _____ mm

length of supported slab L_s = _____ mm

supporting slab h_{s1} = _____ mm

Load distribution for imposed load

☐ Design model A ☐ Design model B

Permanent loads (characteristic value)

weight of hollow-core slab g_{HC} = _____ kN/m²

other permanent loads Δg = _____ kN/m² *(on supported slab)*

Imposed loads (characteristic value)

surface load q_k = _____ kN/m² *(on supported slab)*

linear load q_k = _____ kN/m *(on PETRA)*

point load Q_k = _____ kN *(on PETRA)*

Partial factors

concrete γ_c = _____ *(recommended value = 1,5)*

steel γ_{M0} = _____ *(recommended value = 1,0)*

reinforcement γ_s = _____ *(recommended value = 1,15)*

permanent load γ_G = _____ *(recommended value = 1,35)*

imposed load γ_Q = _____ *(recommended value = 1,5)*

welds γ_{M2} = _____ *(recommended value = 1,25)*

reduction of imposed load during fire $\psi_{1,2}$ = _____ *(0 – 0,8 depending on the type of building)*

Fire reinforcement

☐ Yes (R60) ☐ No

Print Form

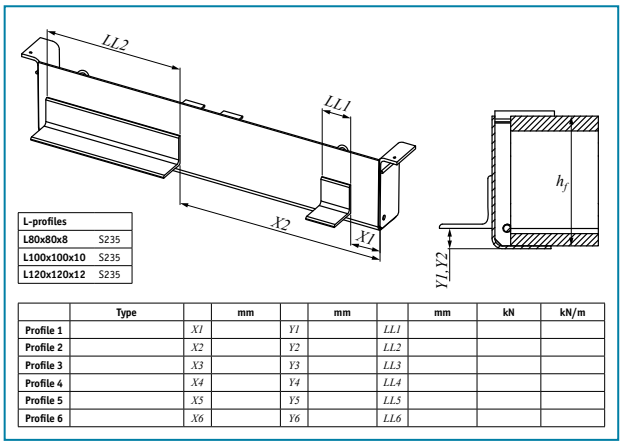

L-profiles	
L80x80x8	S235
L100x100x10	S235
L120x120x12	S235

	Type		mm		mm		mm	kN	kN/m
Profile 1		*X1*		*Y1*		*LL1*			
Profile 2		*X2*		*Y2*		*LL2*			
Profile 3		*X3*		*Y3*		*LL3*			
Profile 4		*X4*		*Y4*		*LL4*			
Profile 5		*X5*		*Y5*		*LL5*			
Profile 6		*X6*		*Y6*		*LL6*			

PETRA 150, PETRA strong 150

γ_G = 1.35	Self-weight of the slab [kN/m²]
γ_Q = 1.50	4.0 kN/m²
γ_{M0} = 1.0	3.0 kN/m²
γ_c = 1.4	2.0 kN/m²

Use characteristic values of both self-weights and imposed loads when using these curves.

Add the weight of the topping to the self-weight of the slab if the topping will be cast before slab joints are hardened.

PETRA 150-1200, PETRA strong 150-1200

– Valid for opening widths of 0 < L ≤ 1200 mm

Normal situation

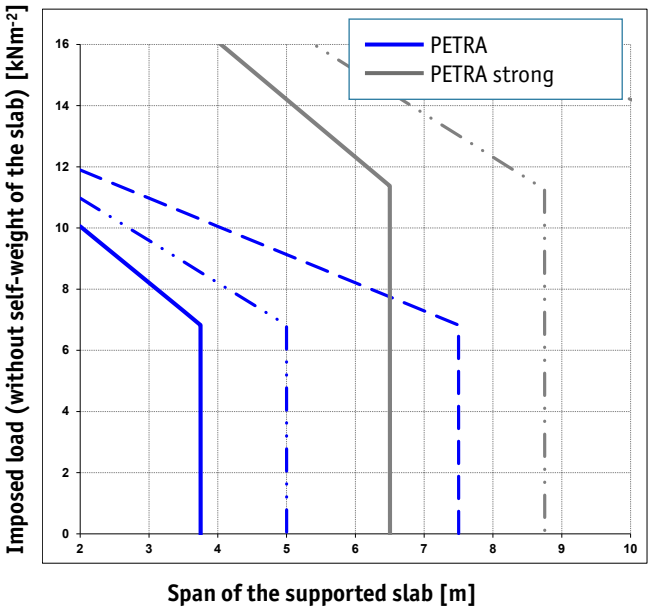

Fire situation, class R60

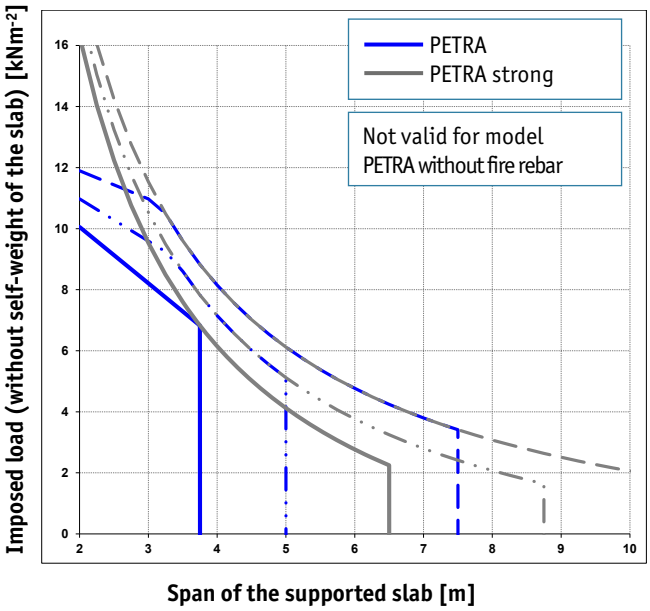

PETRA 150-2400, PETRA strong 150-2400

– Valid for opening widths of 1200 < L ≤ 2400 mm

Normal situation

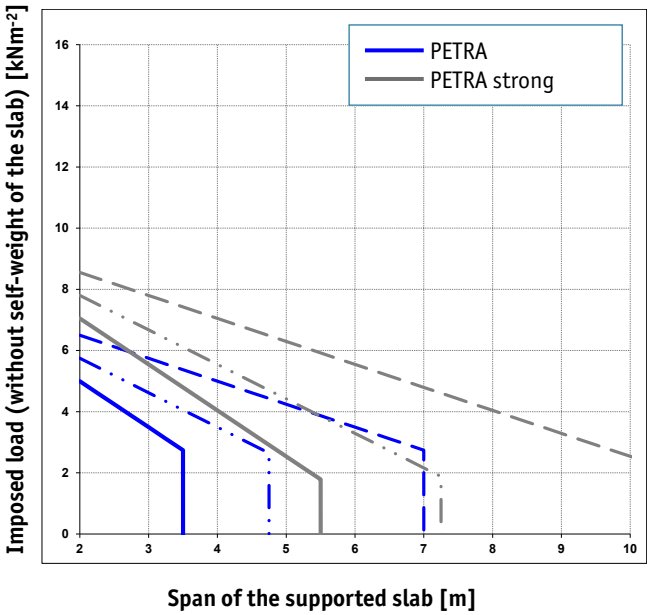

Fire situation, class R60

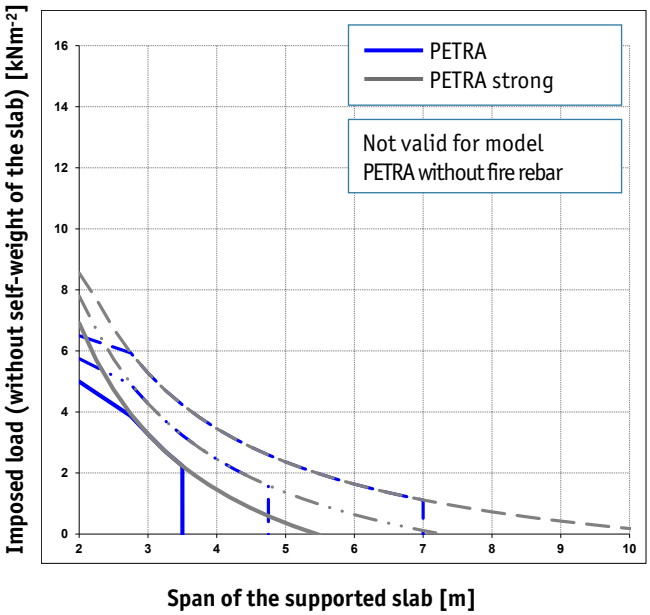

PETRA 175, PETRA strong 175

γ_G = 1.35	Self-weight of the slab [kN/m²]
γ_Q = 1.50	4.0 kN/m²
γ_{M0} = 1.0	3.0 kN/m²
γ_c = 1.4	2.0 kN/m²

Use characteristic values of both self-weights and imposed loads when using these curves.

Add the weight of the topping to the self-weight of the slab if the topping will be cast before slab joints are hardened.

PETRA 175-1200, PETRA strong 175-1200

– Valid for opening widths of 0 < L ≤ 1200 mm

Normal situation

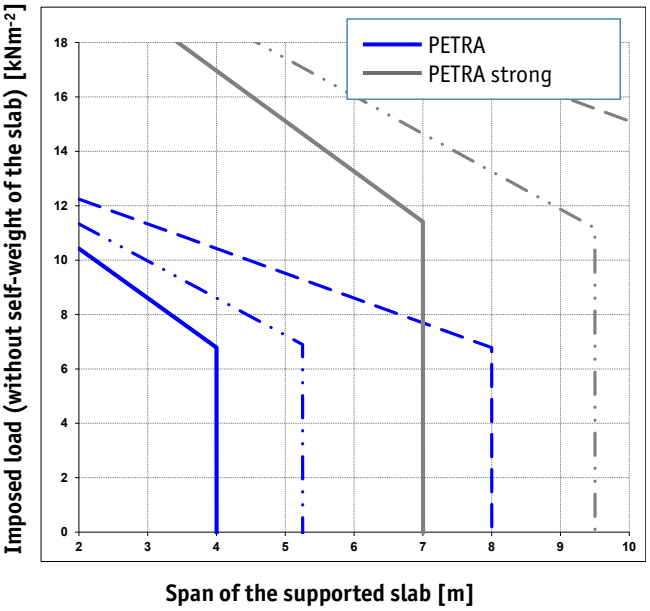

Fire situation, class R60

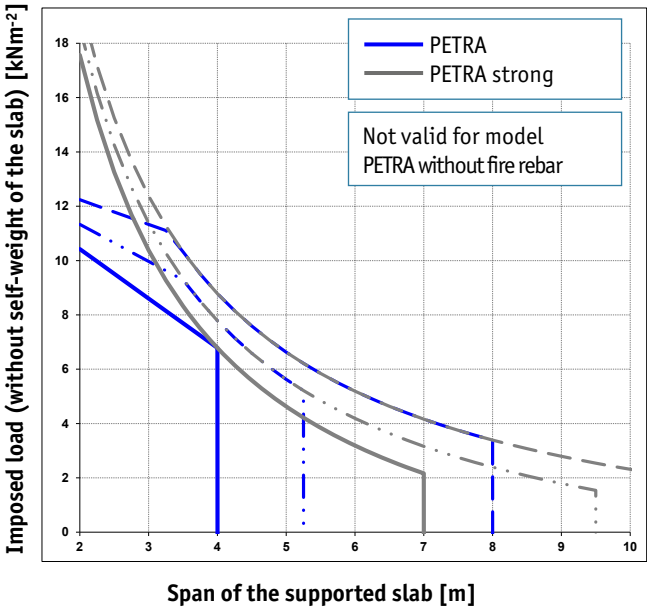

PETRA 175-2400, PETRA strong 175-2400

– Valid for opening widths of 1200 < L ≤ 2400 mm

Normal situation

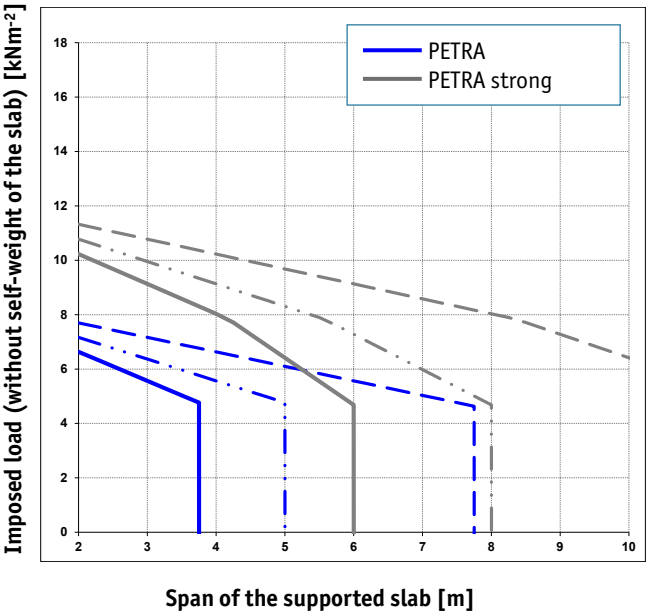

Fire situation, class R60

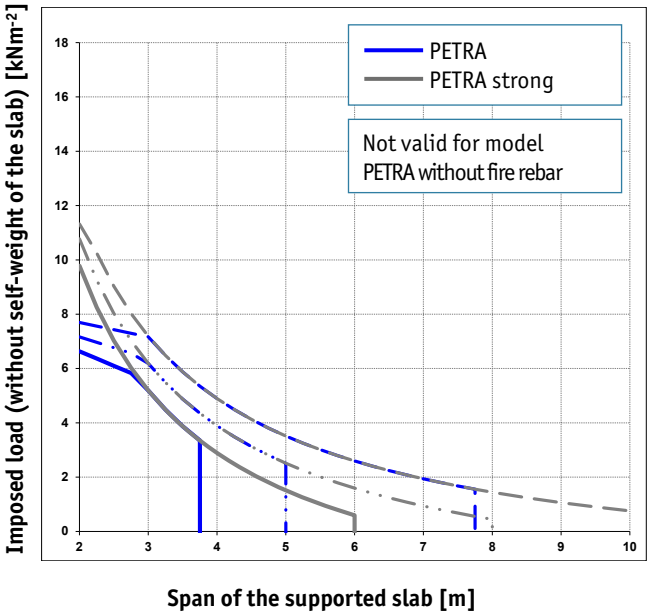

PETRA 200, PETRA strong 200

γ_G = 1.35	Self-weight of the slab [kN/m²]
γ_Q = 1.50	4.0 kN/m²
γ_{M0} = 1.0	3.0 kN/m²
γ_c = 1.4	2.0 kN/m²

Use characteristic values of both self-weights and imposed loads when using these curves.

Add the weight of the topping to the self-weight of the slab if the topping will be cast before slab joints are hardened.

PETRA 200-1200, PETRA strong 200-1200

– Valid for opening widths of 0 < L ≤ 1200 mm

Normal situation

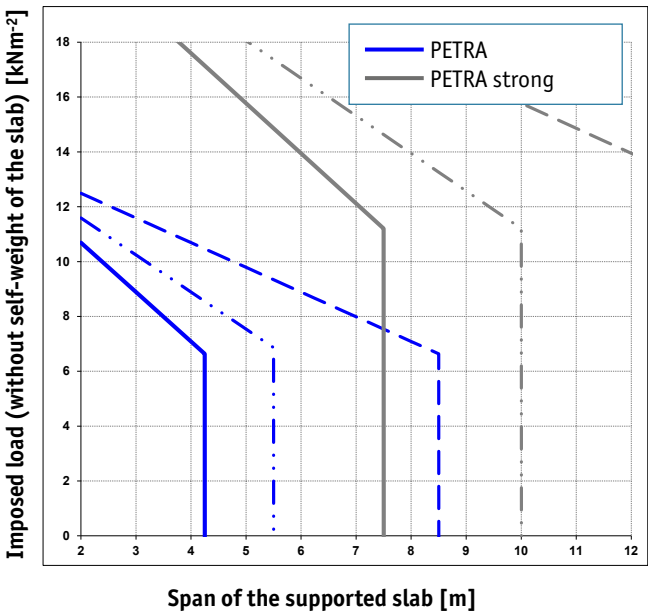

Fire situation, class R60

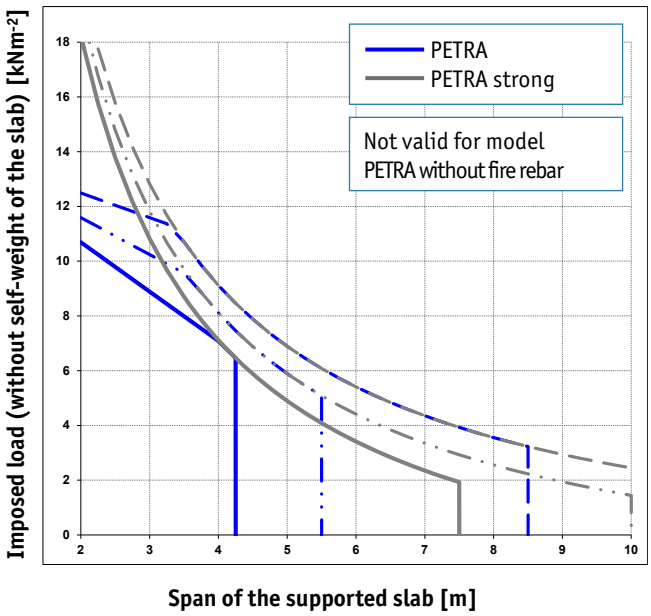

PETRA 200-2400, PETRA strong 200-2400

– Valid for opening widths of 1200 < L ≤ 2400 mm

Normal situation

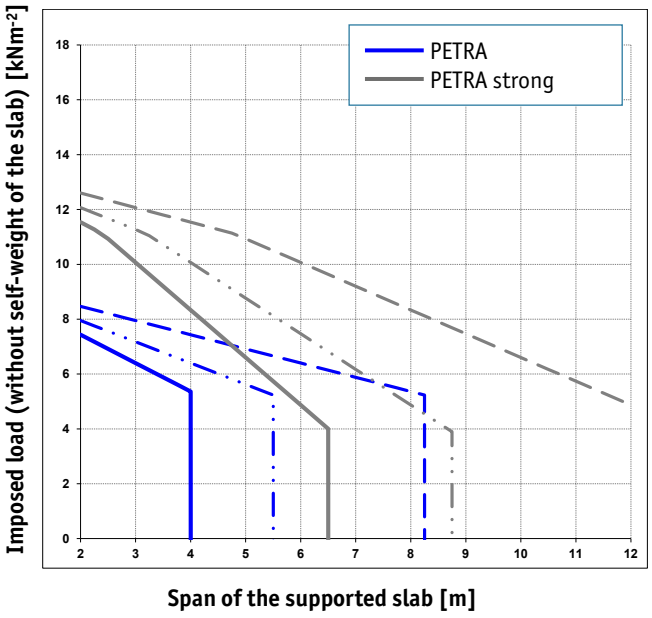

Fire situation, class R60

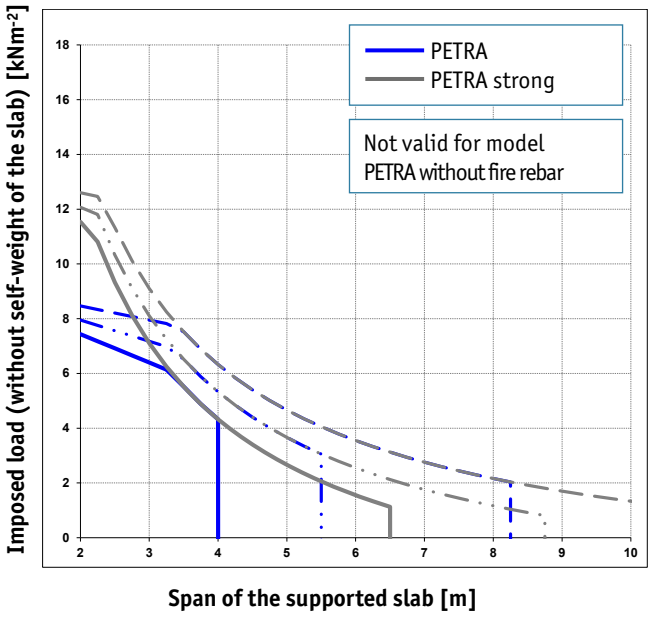

PETRA 220, PETRA strong 220

γ_G = 1.35	Self-weight of the slab [kN/m²]
γ_Q = 1.50	4.0 kN/m²
γ_{M0} = 1.0	3.0 kN/m²
γ_c = 1.4	2.0 kN/m²

Use characteristic values of both self-weights and imposed loads when using these curves.

Add the weight of the topping to the self-weight of the slab if the topping will be cast before slab joints are hardened.

PETRA 220-1200, PETRA strong 220-1200

– Valid for opening widths of 0 < L ≤ 1200 mm

Normal situation

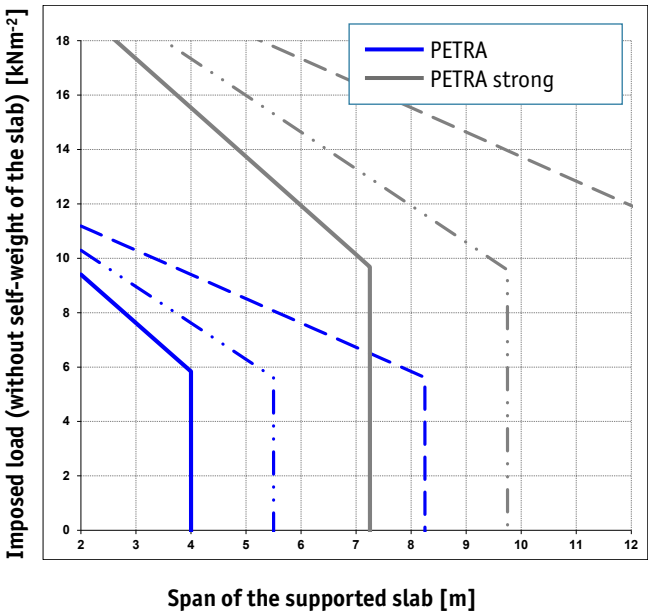

Fire situation, class R60

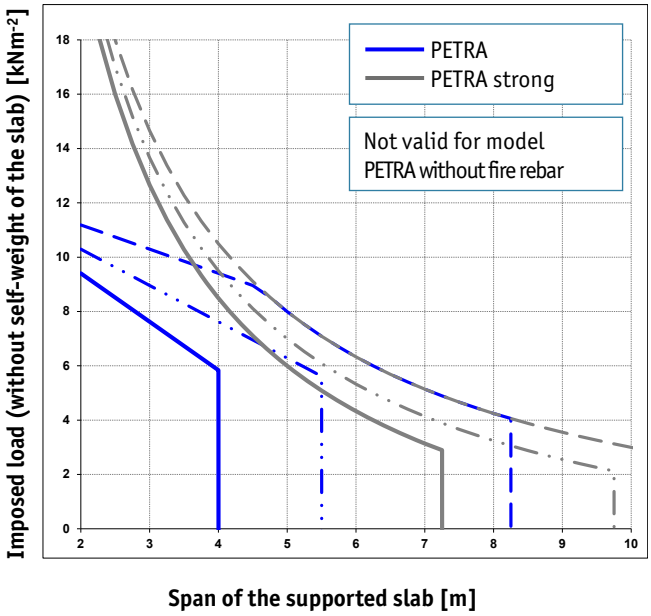

PETRA 220-2400, PETRA strong 220-2400

– Valid for opening widths of 1200 < L ≤ 2400 mm

Normal situation

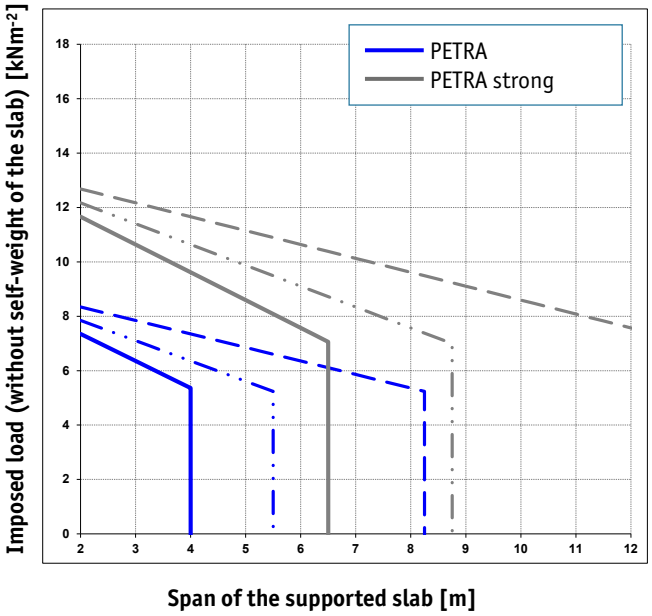

Fire situation, class R60

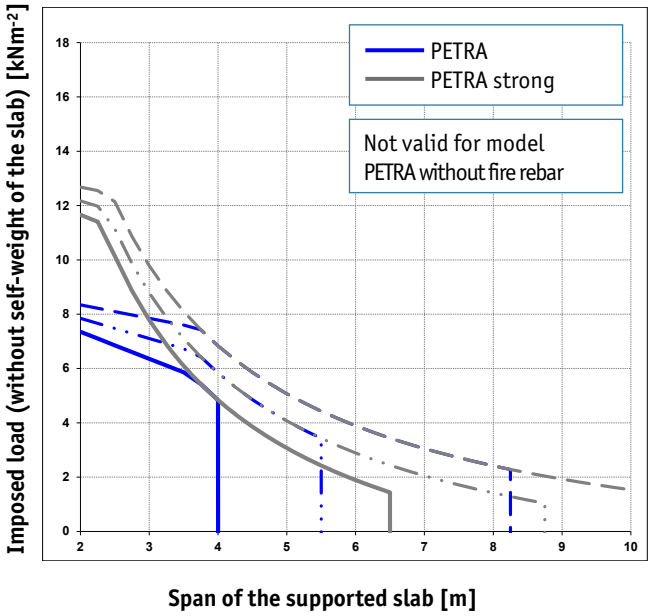

PETRA 265, PETRA strong 265

γ_G = 1.35	Self-weight of the slab [kN/m²]
γ_Q = 1.50	5.0 kN/m²
γ_{M0} = 1.0	4.0 kN/m²
γ_c = 1.4	3.0 kN/m²

Use characteristic values of both self-weights and imposed loads when using these curves.

Add the weight of the topping to the self-weight of the slab if the topping will be cast before slab joints are hardened.

PETRA 265-1200, PETRA strong 265-1200

– Valid for opening widths of 0 < L ≤ 1200 mm

Normal situation

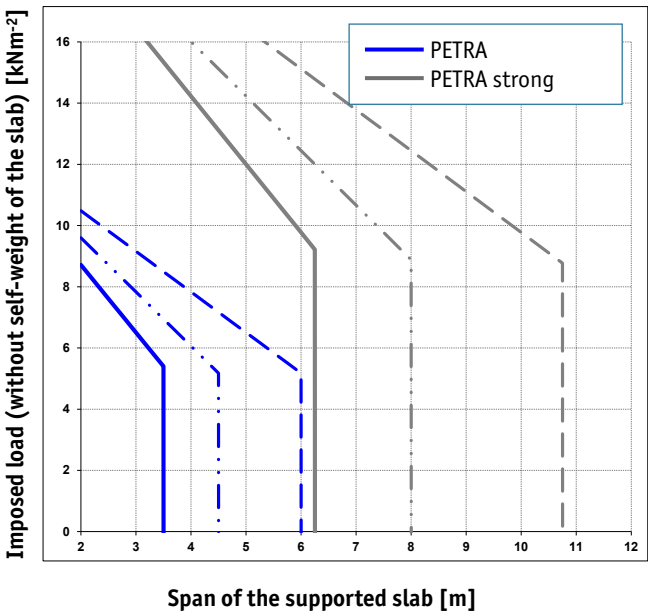

Fire situation, class R60

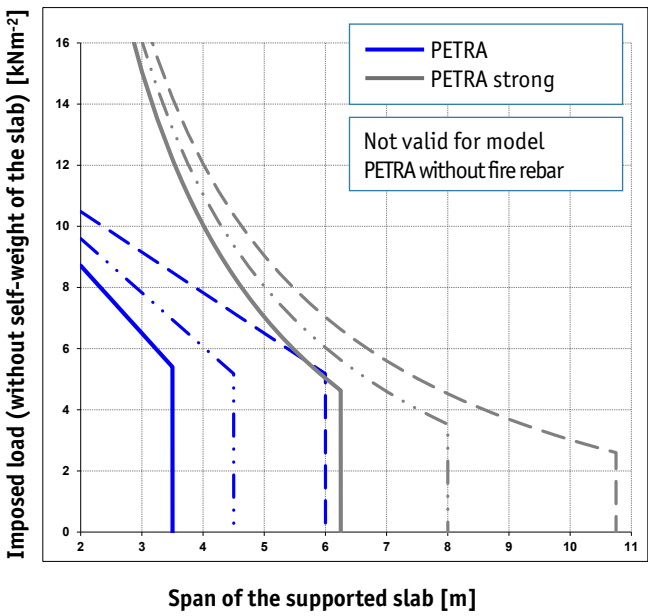

PETRA 265-2400, PETRA strong 265-2400

– Valid for opening widths of 1200 < L ≤ 2400 mm

Normal situation

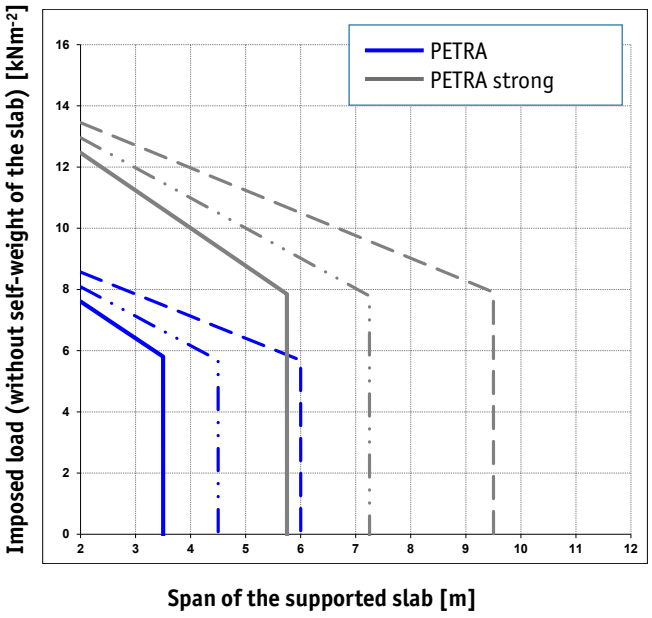

Fire situation, class R60

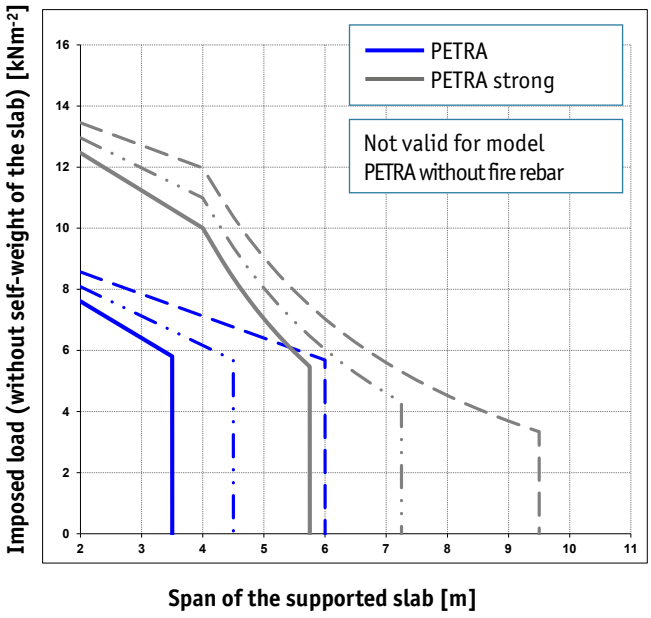

PETRA 300, PETRA strong 300

γ_G = 1.35	Self-weight of the slab [kN/m²]
γ_Q = 1.50	5.0 kN/m²
γ_{M0} = 1.0	4.0 kN/m²
γ_c = 1.4	3.0 kN/m²

Use characteristic values of both self-weights and imposed loads when using these curves.

Add the weight of the topping to the self-weight of the slab if the topping will be cast before slab joints are hardened.

PETRA 300-1200, PETRA strong 300-1200

– Valid for opening widths of 0 < L ≤ 1200 mm

Normal situation

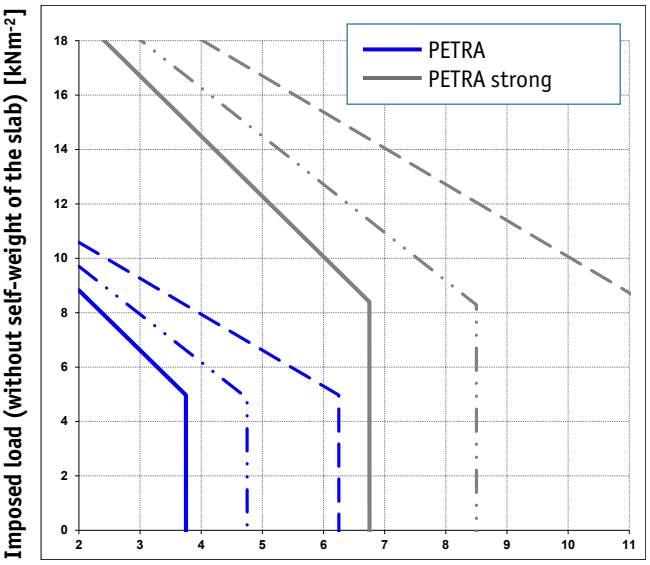

Fire situation, class R60

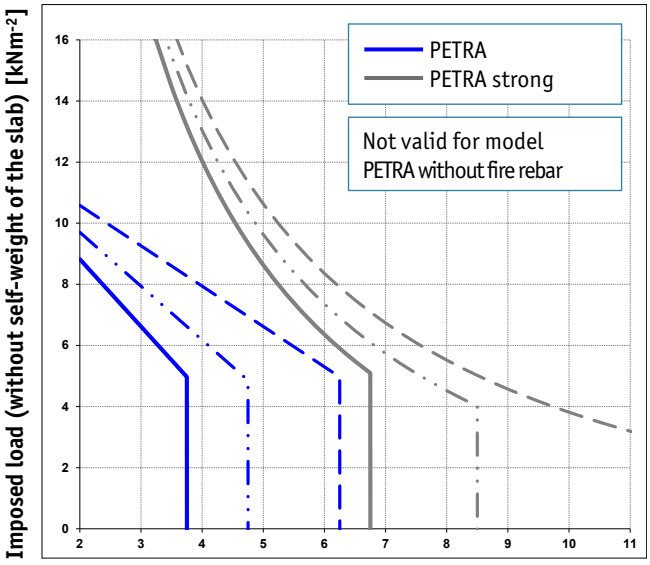

PETRA 300-2400, PETRA strong 300-2400

– Valid for opening widths of 1200 < L ≤ 2400 mm

Normal situation

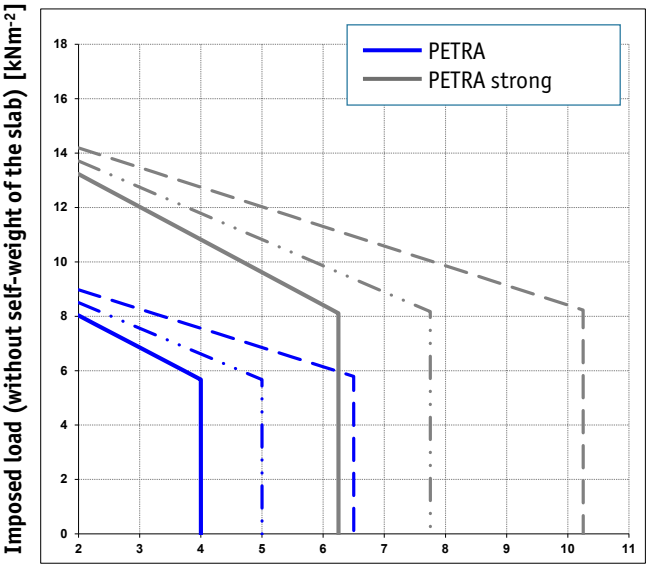

Fire situation, class R60

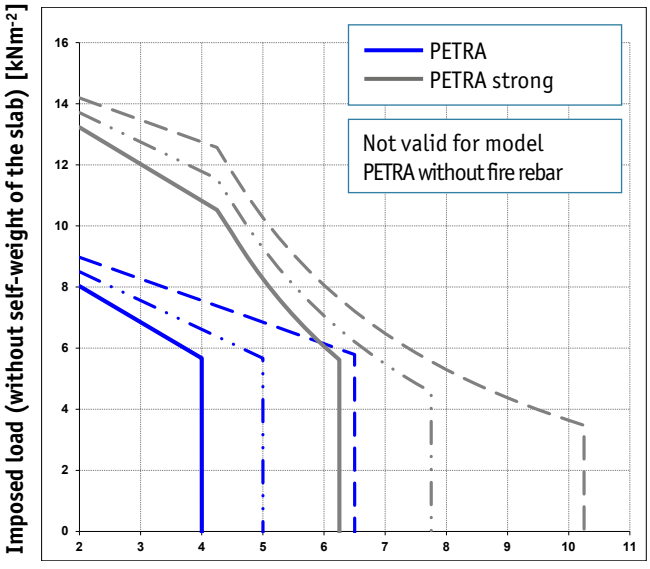

PETRA 320, PETRA strong 320

γ_G = 1.35	Self-weight of the slab [kN/m²]
γ_Q = 1.50	5.0 kN/m²
γ_{M0} = 1.0	4.0 kN/m²
γ_c = 1.4	3.0 kN/m²

Use characteristic values of both self-weights and imposed loads when using these curves.

Add the weight of the topping to the self-weight of the slab if the topping will be cast before slab joints are hardened.

PETRA 320-1200, PETRA strong 320-1200

– Valid for opening widths of 0 < L ≤ 1200 mm

Normal situation

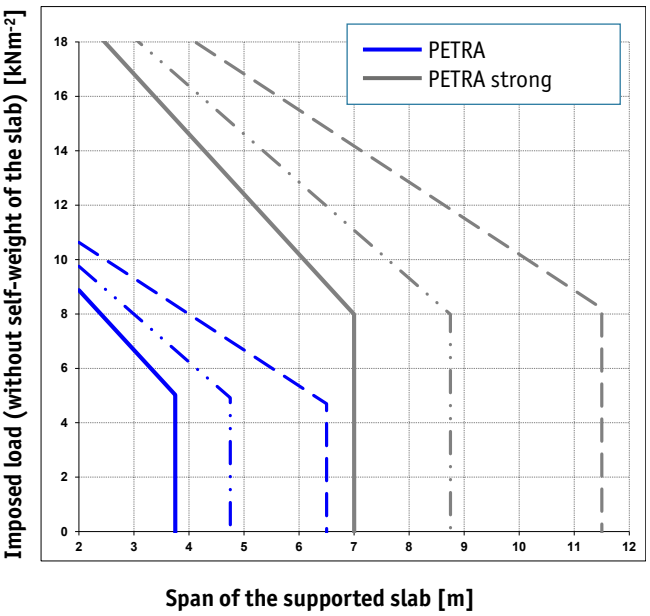

Fire situation, class R60

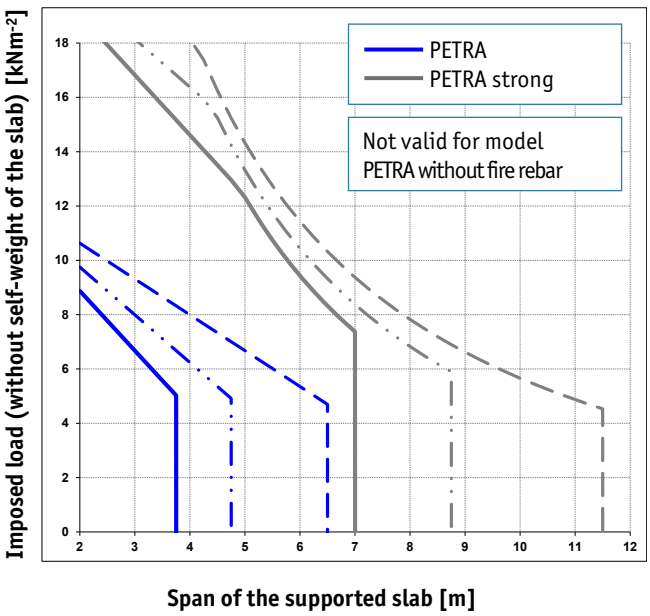

PETRA 320-2400, PETRA strong 320-2400

– Valid for opening widths of 1200 < L ≤ 2400 mm

Normal situation

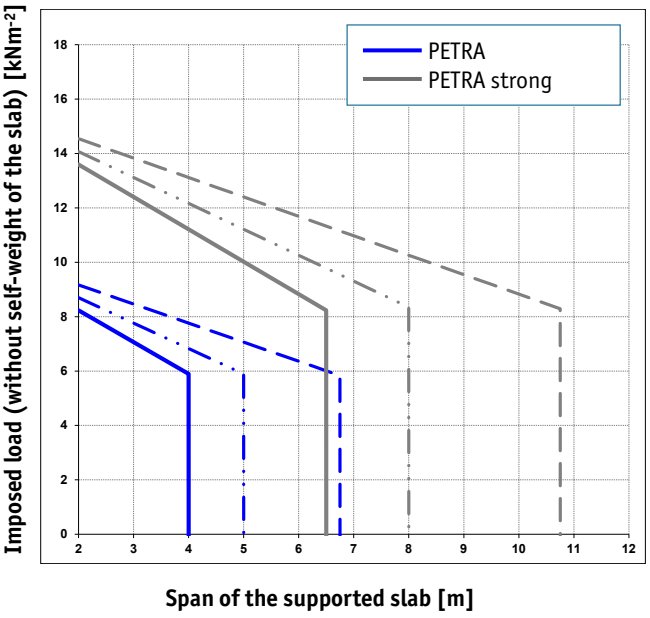

Fire situation, class R60

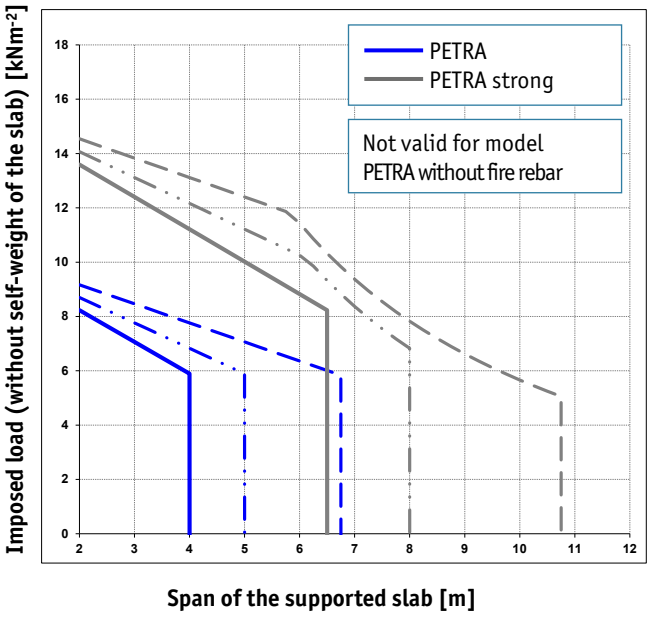

PETRA 350, PETRA strong 350

γ_G = 1.35	Self-weight of the slab [kN/m²]
γ_Q = 1.50	6.0 kN/m²
γ_{M0} = 1.0	5.0 kN/m²
γ_c = 1.4	4.0 kN/m²

Use characteristic values of both self-weights and imposed loads when using these curves.

Add the weight of the topping to the self-weight of the slab if the topping will be cast before slab joints are hardened.

PETRA 350-1200, PETRA strong 350-1200

– Valid for opening widths of 0 < L ≤ 1200 mm

Normal situation

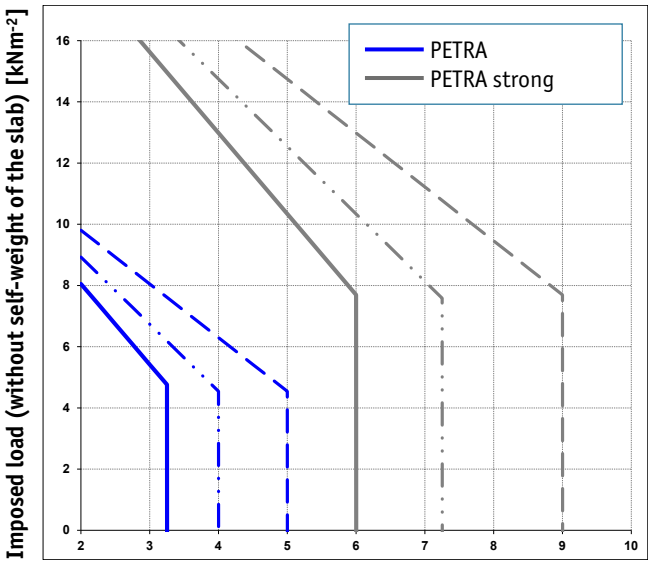

Fire situation, class R60

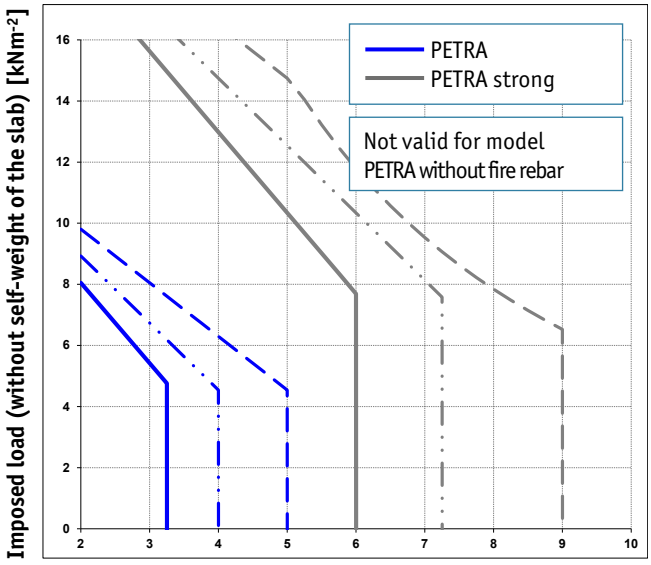

PETRA 350-2400, PETRA strong 350-2400

– Valid for opening widths of 1200 < L ≤ 2400 mm

Normal situation

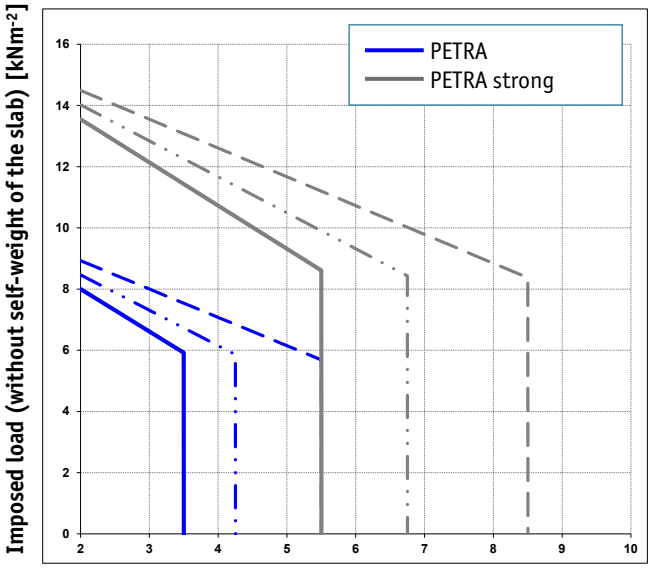

Fire situation, class R60

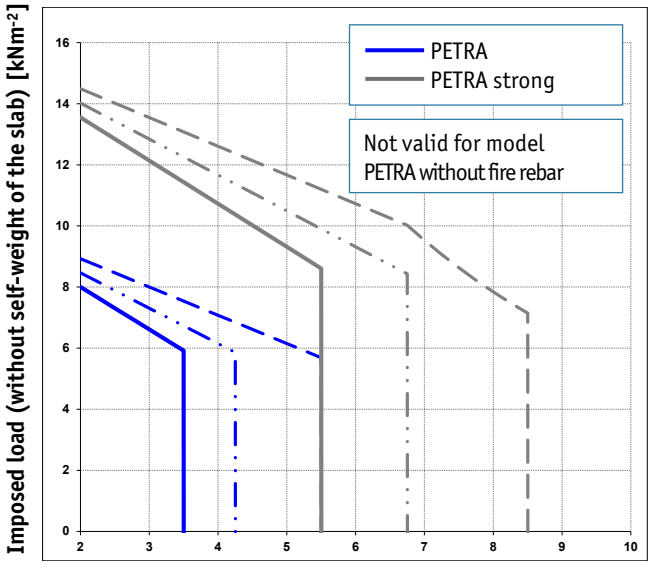

PETRA 370, PETRA strong 370

γ_G = 1.35	Self-weight of the slab [kN/m²]
γ_Q = 1.50	6.0 kN/m²
γ_{M0} = 1.0	5.0 kN/m²
γ_c = 1.4	4.0 kN/m²

Use characteristic values of both self-weights and imposed loads when using these curves.

Add the weight of the topping to the self-weight of the slab if the topping will be cast before slab joints are hardened.

PETRA 370-1200, PETRA strong 370-1200

– Valid for opening widths of 0 < L ≤ 1200 mm

Normal situation

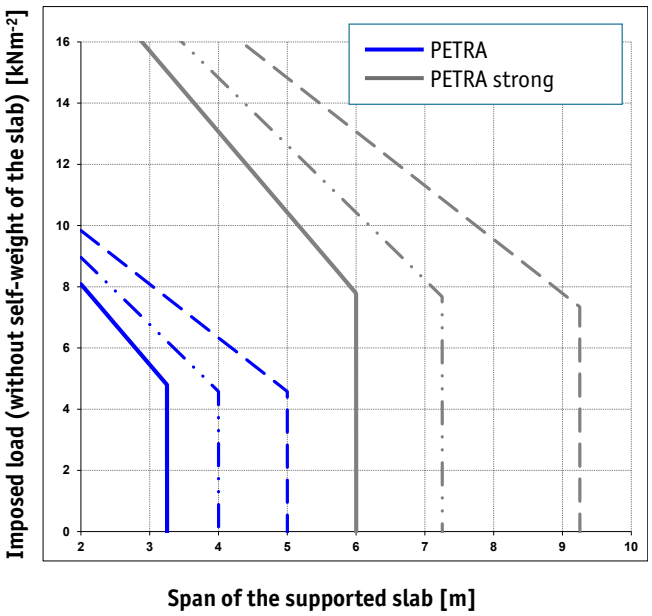

Fire situation, class R60

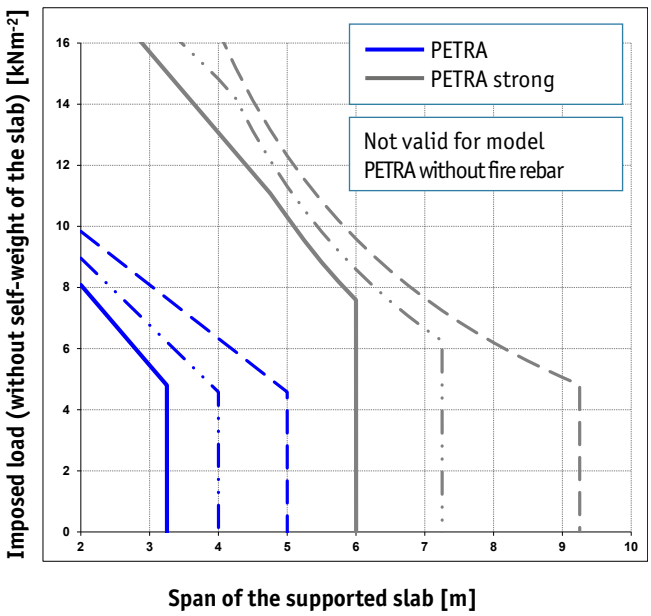

PETRA 370-2400, PETRA strong 370-2400

– Valid for opening widths of 1200 < L ≤ 2400 mm

Normal situation

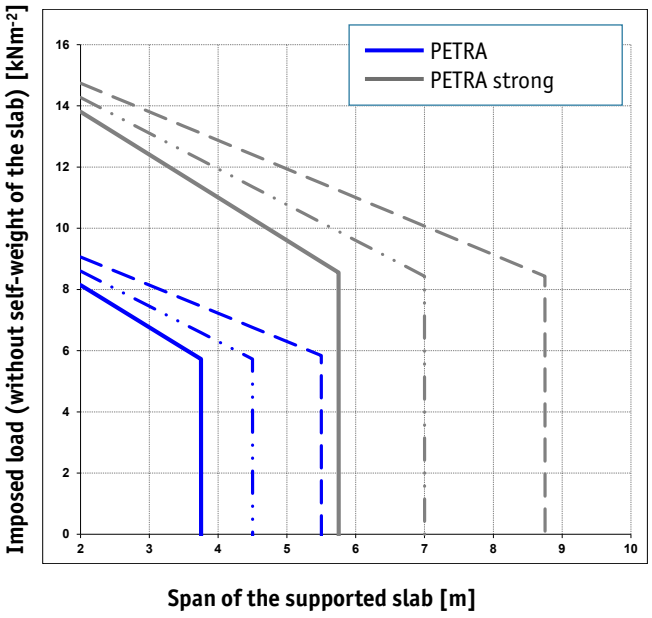

Fire situation, class R60

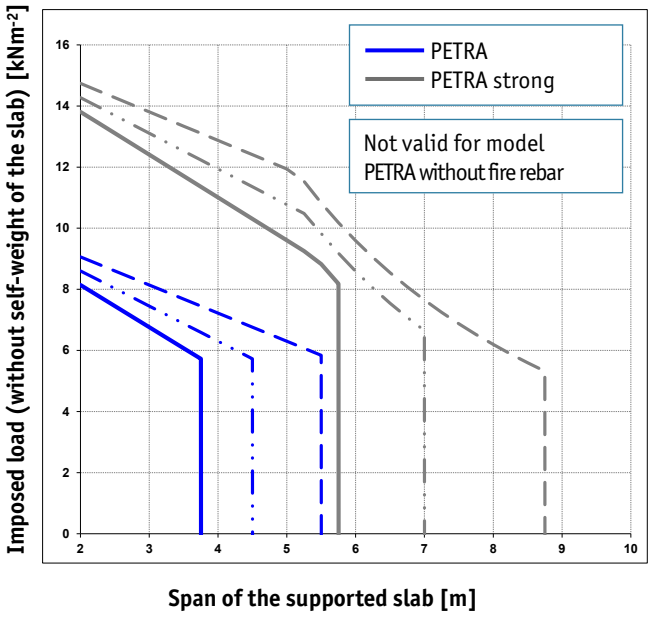

PETRA 400, PETRA strong 400

γ_G = 1.35	Self-weight of the slab [kN/m²]
γ_Q = 1.50	6.0 kN/m²
γ_{M0} = 1.0	5.0 kN/m²
γ_c = 1.4	4.0 kN/m²

Use characteristic values of both self-weights and imposed loads when using these curves.

Add the weight of the topping to the self-weight of the slab if the topping will be cast before slab joints are hardened.

PETRA 400-1200, PETRA strong 400-1200

– Valid for opening widths of 0 < L ≤ 1200 mm

Normal situation

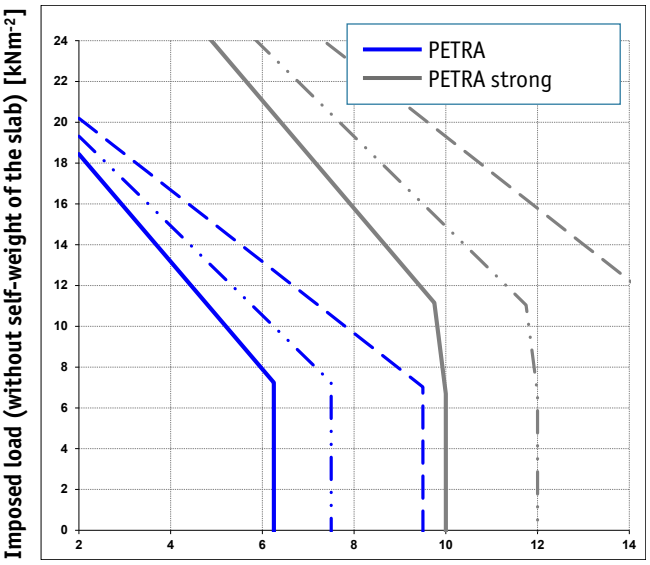

Fire situation, class R60

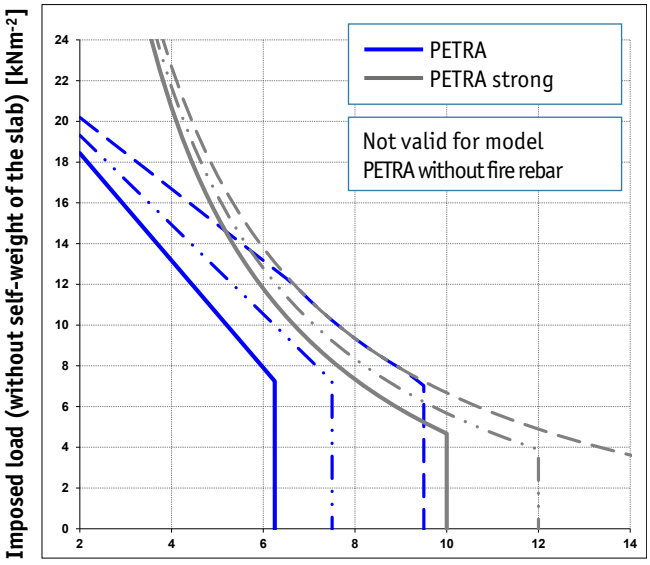

PETRA 400-2400, PETRA strong 400-2400

– Valid for opening widths of 1200 < L ≤ 2400 mm

Normal situation

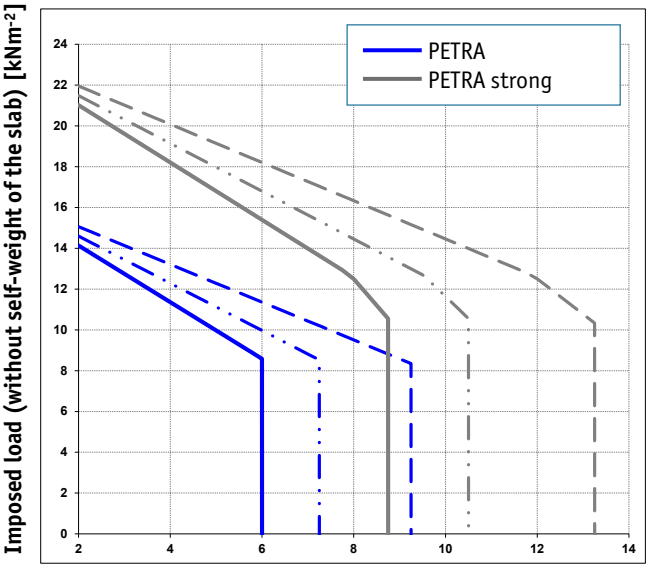

Fire situation, class R60

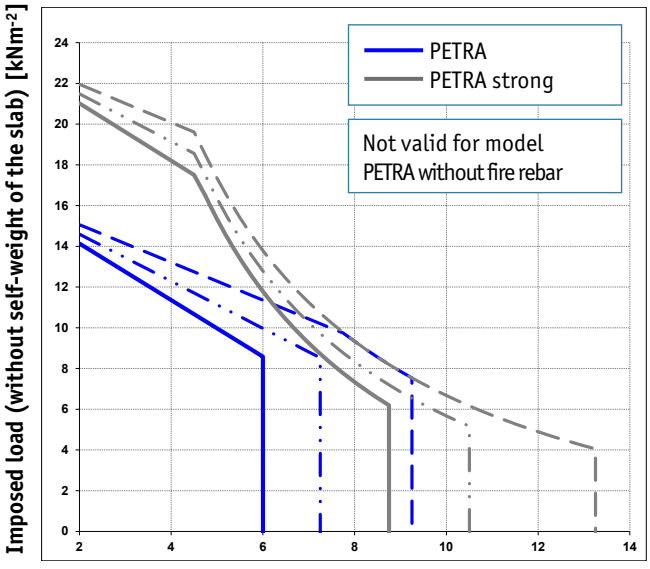

PETRA 450, PETRA strong 450

γ_G = 1.35	Self-weight of the slab [kN/m²]
γ_Q = 1.50	7.0 kN/m²
γ_{M0} = 1.0	6.0 kN/m²
γ_c = 1.4	5.0 kN/m²

Use characteristic values of both self-weights and imposed loads when using these curves.

Add the weight of the topping to the self-weight of the slab if the topping will be cast before slab joints are hardened.

PETRA 450-1200, PETRA strong 450-1200

– Valid for opening widths of 0 < L ≤ 1200 mm

Normal situation

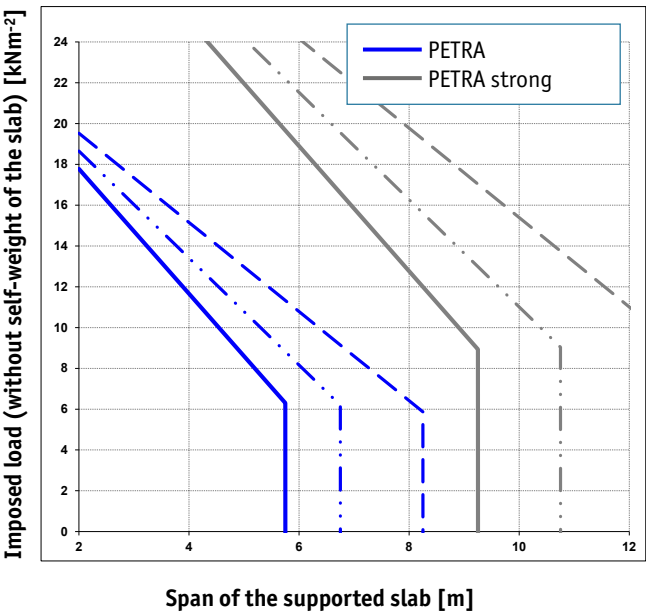

Fire situation, class R60

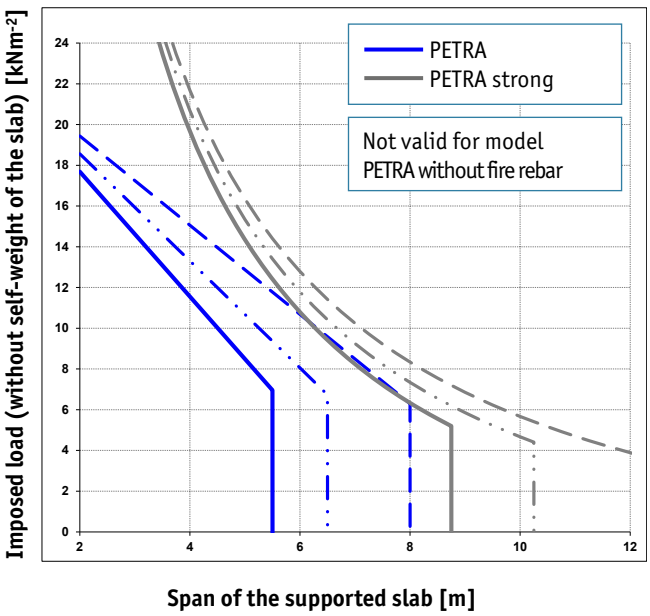

PETRA 450-2400, PETRA strong 450-2400

– Valid for opening widths of 1200 < L ≤ 2400 mm

Normal situation

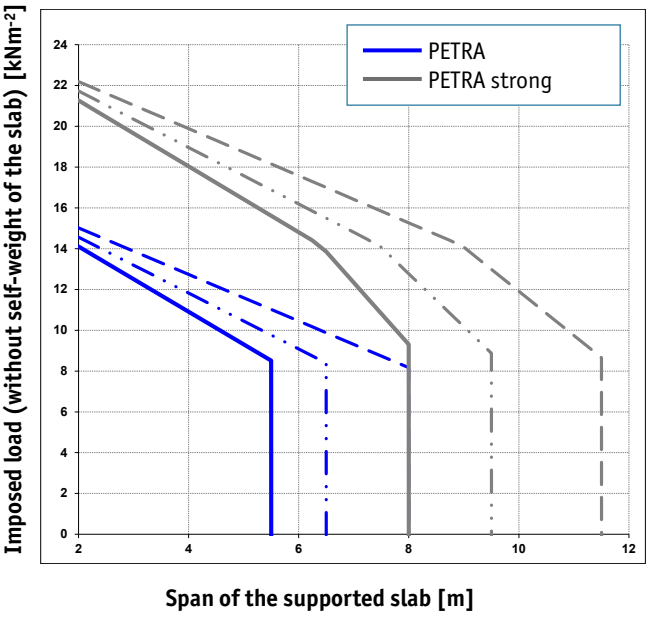

Fire situation, class R60

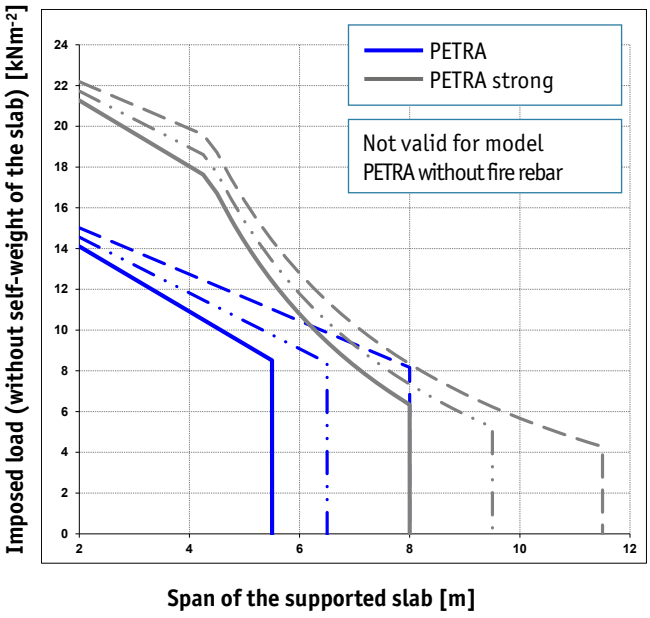

PETRA 500, PETRA strong 500

γ_G = 1.35	Self-weight of the slab [kN/m²]
γ_Q = 1.50	7.0 kN/m²
γ_{M0} = 1.0	6.0 kN/m²
γ_c = 1.4	5.0 kN/m²

Use characteristic values of both self-weights and imposed loads when using these curves.

Add the weight of the topping to the self-weight of the slab if the topping will be cast before slab joints are hardened.

PETRA 500-1200, PETRA strong 500-1200

– Valid for opening widths of 0 < L ≤ 1200 mm

Normal situation

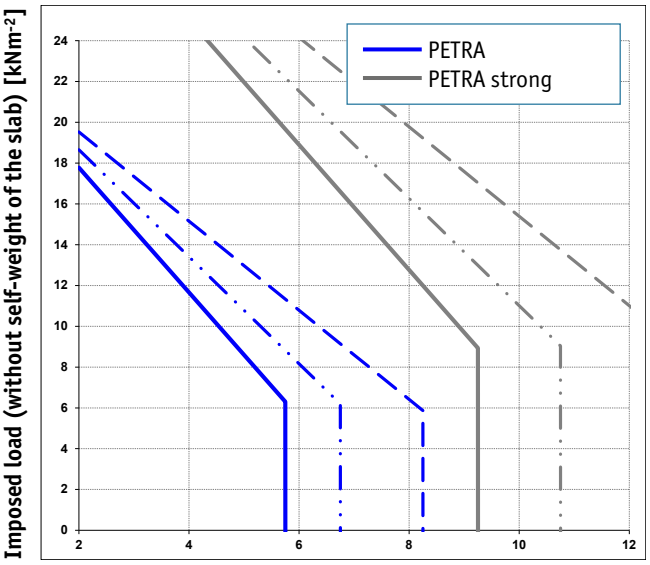

Fire situation, class R60

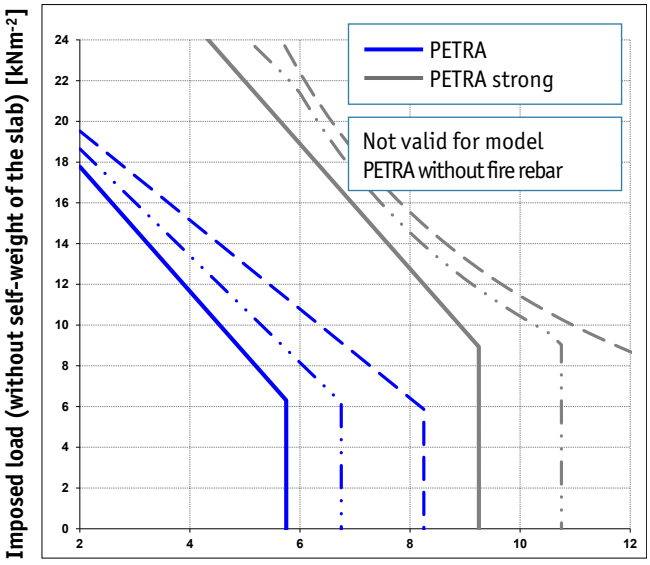

PETRA 500-2400, PETRA strong 500-2400

– Valid for opening widths of 1200 < L ≤ 2400 mm

Normal situation

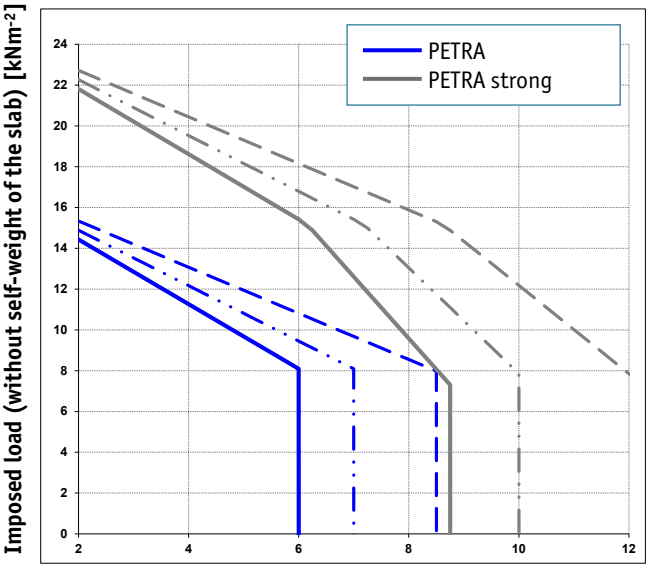

Fire situation, class R60

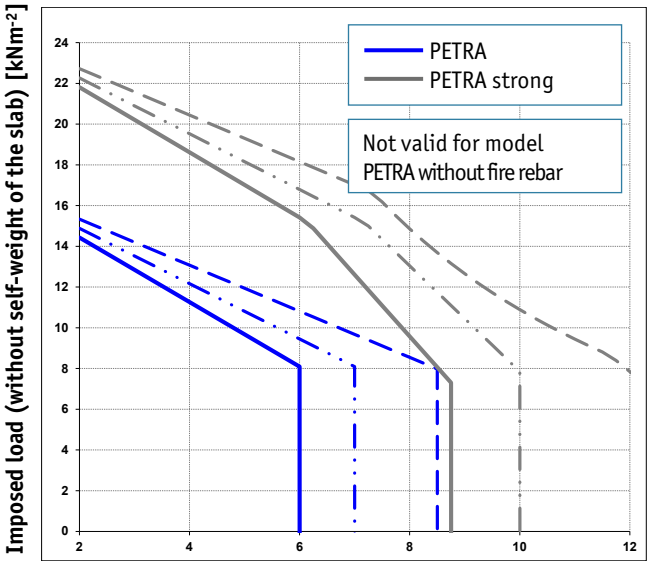

PETRA recess 175

γ_G = 1.35	Self-weight of the slab [kN/m²]
γ_Q = 1.50	6.0 kN/m²
γ_{M0} = 1.0	5.0 kN/m²
γ_c = 1.4	4.0 kN/m²

Use characteristic values of both self-weights and imposed loads when using these curves. Add the weight of the topping to the self-weight of the slab if the topping will be cast before slab joints are hardened.

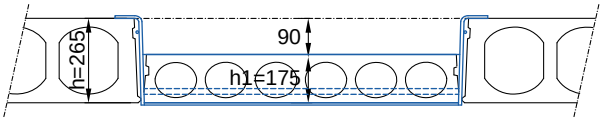

PETRA recess 175-1200

– Valid for opening widths of 0 < L ≤ 1200 mm

Normal situation

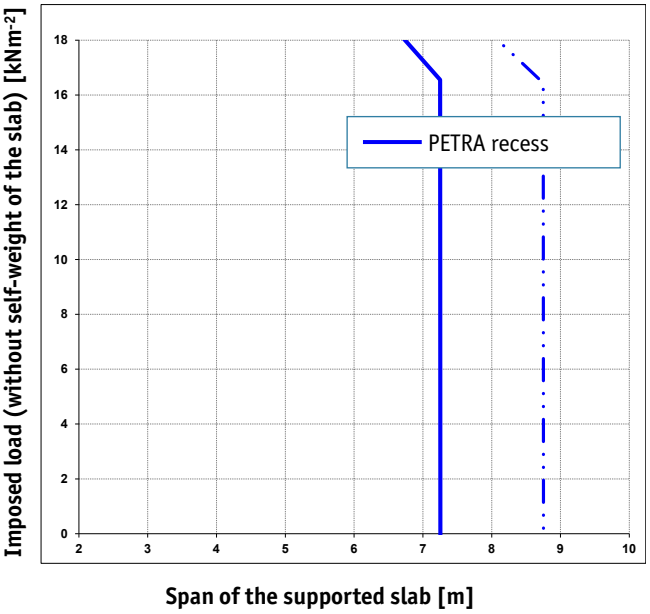

Fire situation, class R60

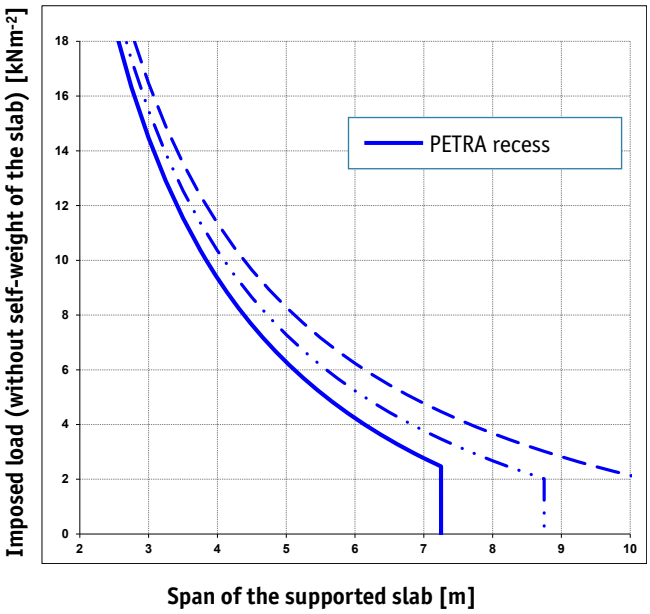

PETRA recess 175-2400

– Valid for opening widths of 1200 < L ≤ 2400 mm

Normal situation

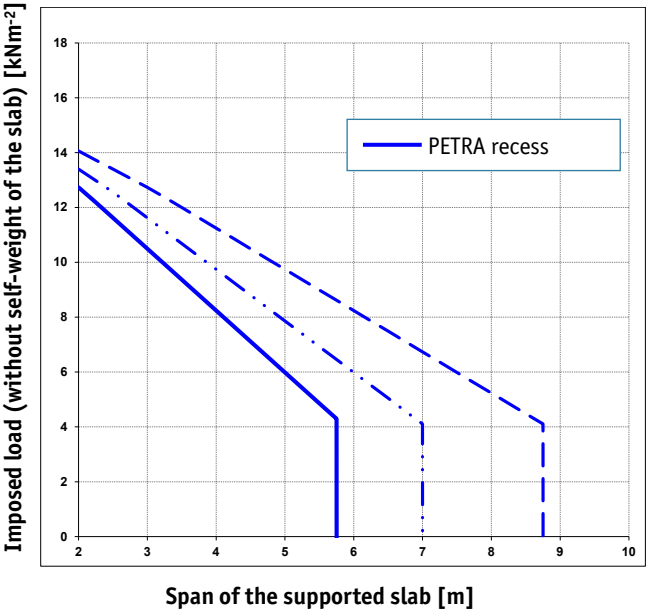

Fire situation, class R60

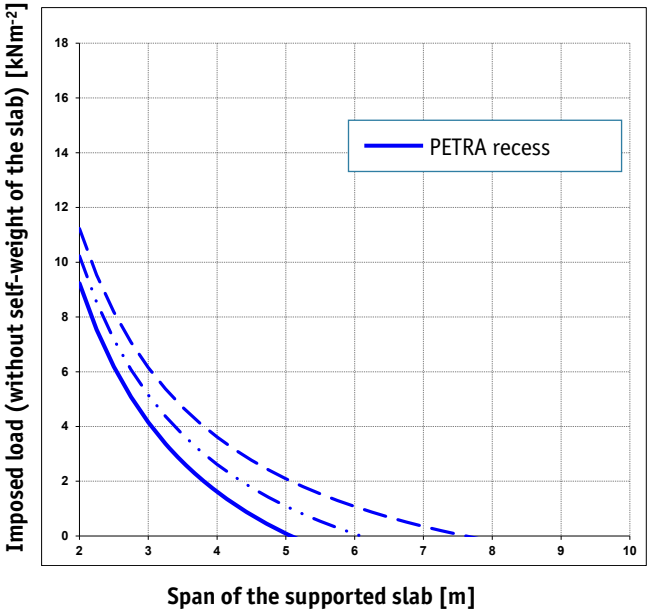

PETRA recess 200

γ_G = 1.35	Self-weight of the slab [kN/m²]
γ_Q = 1.50	6.0 kN/m²
γ_{M0} = 1.0	5.0 kN/m²
γ_c = 1.4	4.0 kN/m²

Use characteristic values of both self-weights and imposed loads when using these curves. Add the weight of the topping to the self-weight of the slab if the topping will be cast before slab joints are hardened.

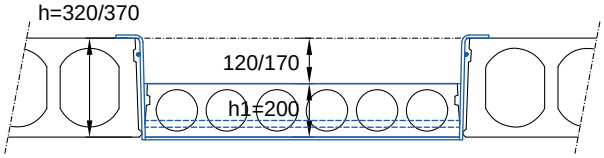

PETRA recess 200-1200

– Valid for opening widths of 0 < L ≤ 1200 mm

Normal situation

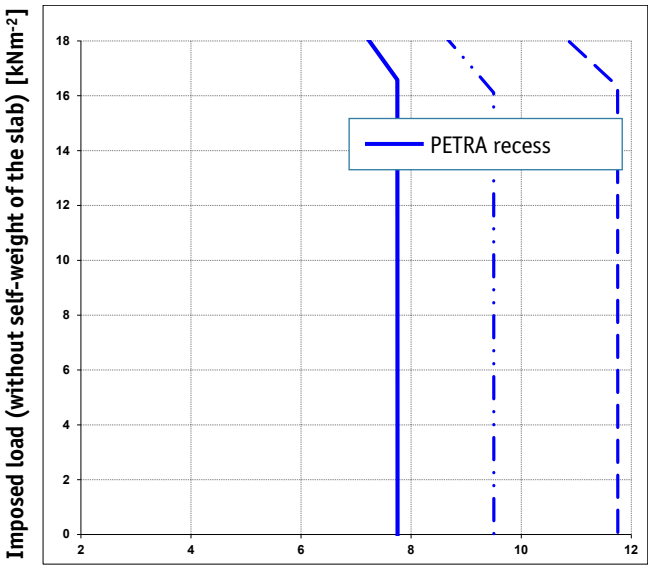

Fire situation, class R60

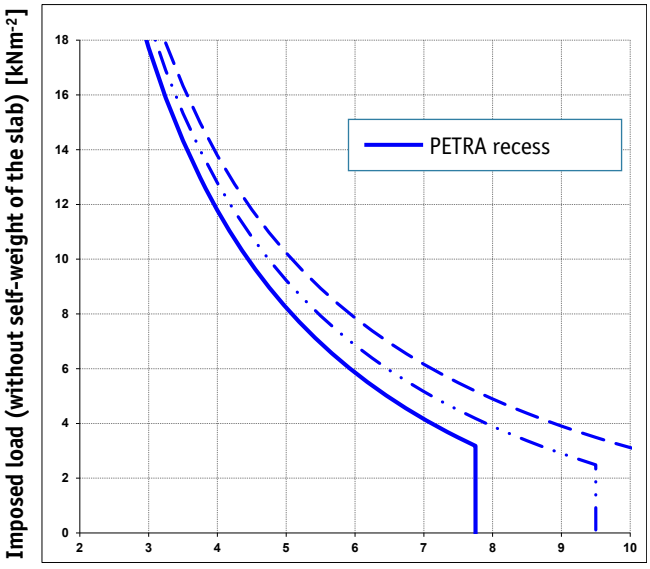

PETRA recess 200-2400

– Valid for opening widths of 1200 < L ≤ 2400 mm

Normal situation

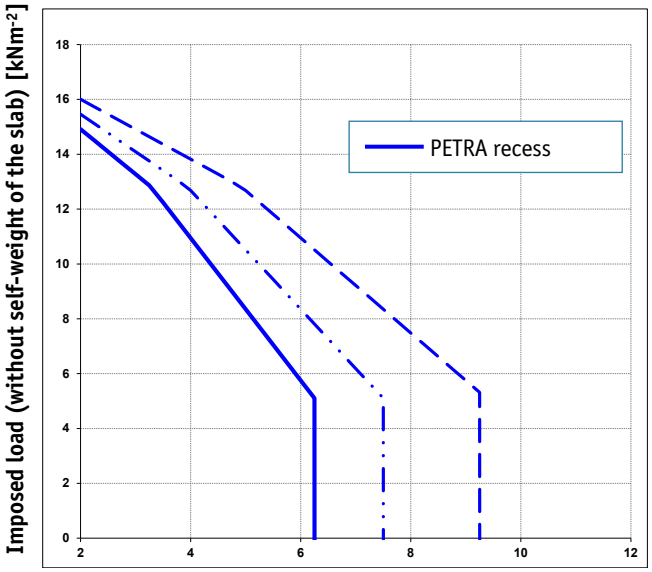

Fire situation, class R60

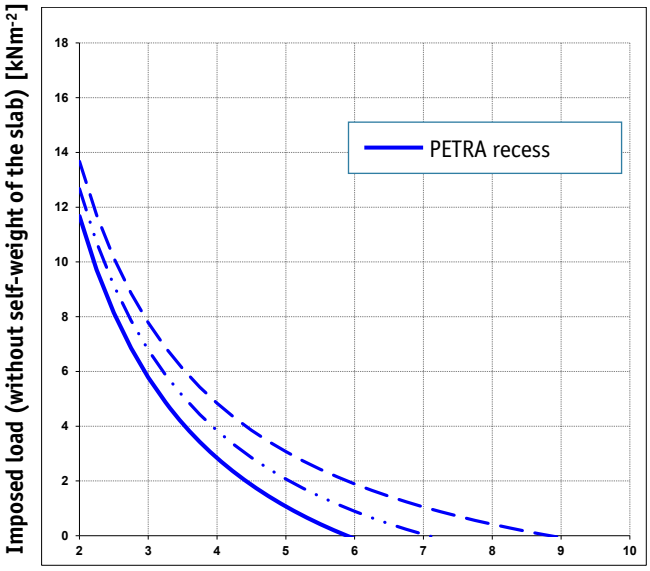

If a non-standard PETRA part is required, please fill in this form and contact Peikko's Customer Engineering Office

Basic dimensions

b = _____ mm

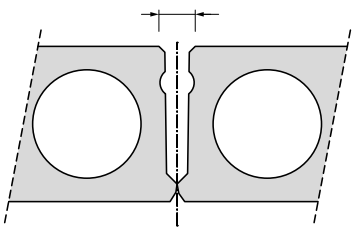

width of opening L = _____ mm

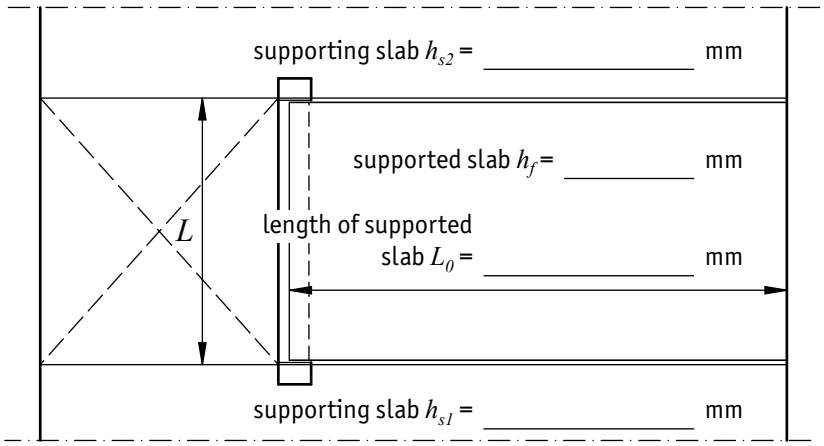

Load distribution for imposed load q_1 and other permanent load Δ_g

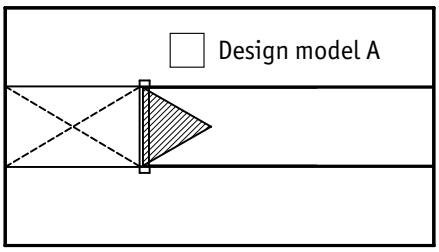

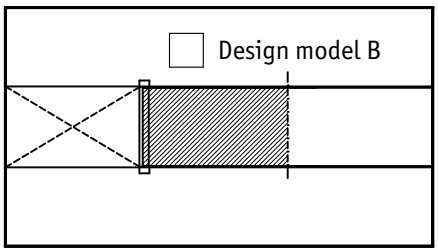

Permanent loads (characteristic value)

weight of hollow-core slab g_{HC} = _____ kN/m²

concrete topping g_{top} = _____ kN/m² (*on supported slab*)

other permanent loads Δ_g = _____ kN/m² (*on supported slab*)

Imposed loads (characteristic value)

surface load q_1 = _____ kN/m² (*on supported slab*)

linear load q_2 = _____ kN/m (*on PETRA*)

point load Q_3 = _____ kN (*on PETRA*)

Partial factors

concrete γ_c = _____ *(recommended value = 1.5)*

steel γ_{M0} = _____ *(recommended value = 1.0)*

reinforcement γ_s = _____ *(recommended value = 1.15)*

permanent load γ_G = _____ *(recommended value = 1.35)*

imposed load γ_Q = _____ *(recommended value = 1.5)*

welds γ_{M2} = _____ *(recommended value = 1.25)*

reduction of imposed load during fire $\psi_{1,2}$ = _____ *(0 – 0.8 depending on the type of building)*

Fire reinforcement ☐ Yes (R60) ☐ No

Additional L-profiles for the front plate of PETRA

Below is an example of how to support in-situ slabs with L-profiles welded into PETRA. This requires PETRA special parts. Peikko's Customer Engineering Office defines ID codes for PETRA special parts.

In addition, the designer can define notes related to the PETRA, such as PETRA-101. This note will be printed on the PETRA label. Characters A-Z, 0-9, + and hyphen (-) can be used. The maximum number of characters is 18.

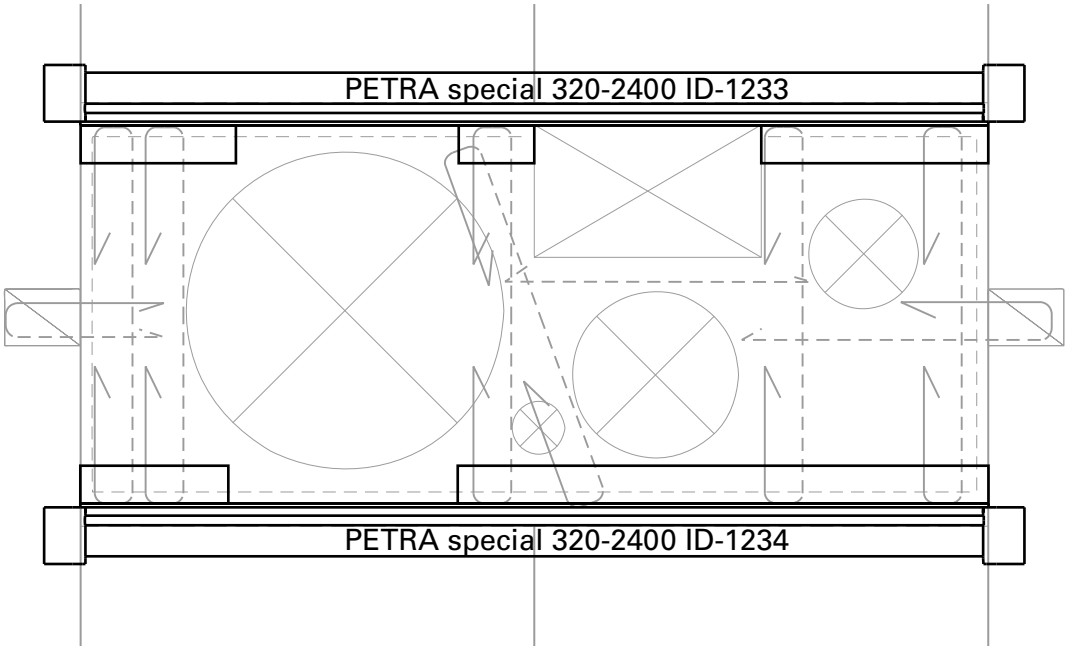

This form can be downloaded from Peikko Group's website. Fill in the form and send it to Peikko's Customer Engineering Office along with the load information.

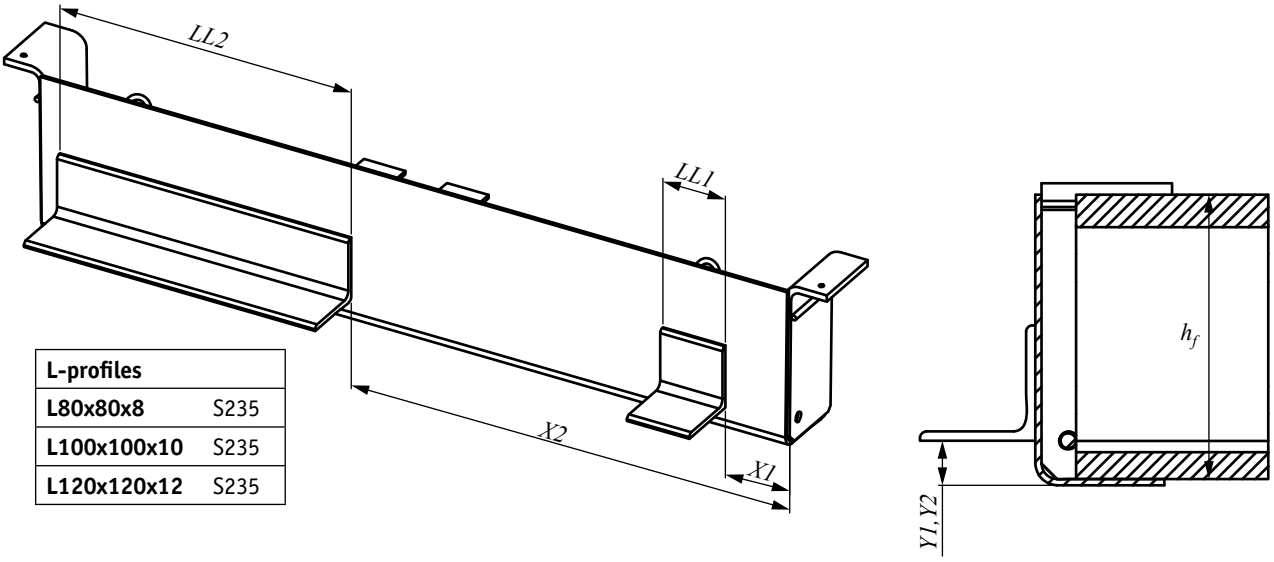

L-profiles	
L80x80x8	S235
L100x100x10	S235
L120x120x12	S235

	Type		mm		mm		mm	kN	kN/m
Profile 1		*X1*		*Y1*		*LL1*			
Profile 2		*X2*		*Y2*		*LL2*			
Profile 3		*X3*		*Y3*		*LL3*			
Profile 4		*X4*		*Y4*		*LL4*			
Profile 5		*X5*		*Y5*		*LL5*			
Profile 6		*X6*		*Y6*		*LL6*			

Identification of the product

The standard PETRA models are described by codes. Standard PETRA models may be identified using this code in the plan drawings of the building. On-site, each PETRA hanger is identified by a label that includes this code. PETRA Special hangers are described by a code with a unique ID code. This code may be used to identify PETRA Special parts both in the plan drawings and on-site.

Colors of PETRA models:

- PETRA (light blue)
- PETRA strong (gray)
- PETRA recess (gray)
- PETRA special (green)

PETRA must be installed on an undamaged hollow-core slab in the location determined in the plan drawing. The slab must be placed so that it is in contact with the fire rebar, with the horizontal steel strip welded to the front plate, or with the lifting loop.

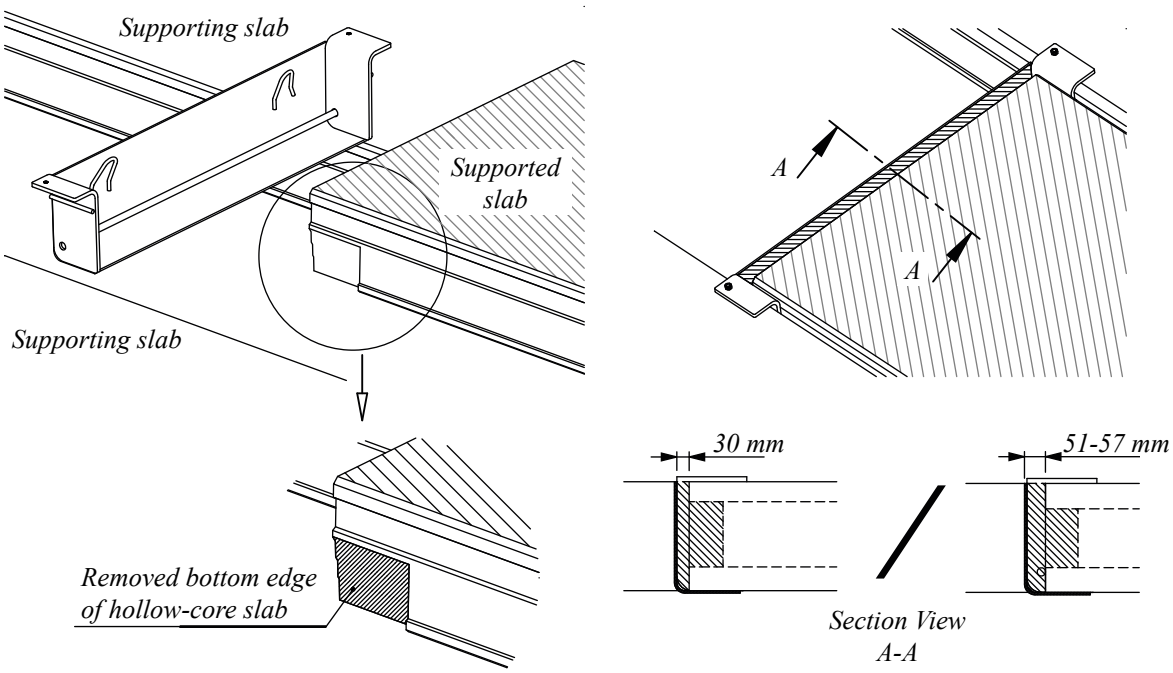

The bottom edge of the supported slab should be removed so that the slab bears directly on the front plate. The top flange of the side plates of the PETRA contains Ø12 mm holes for fastening PETRA to supporting hollow-core slabs using expander bolts.

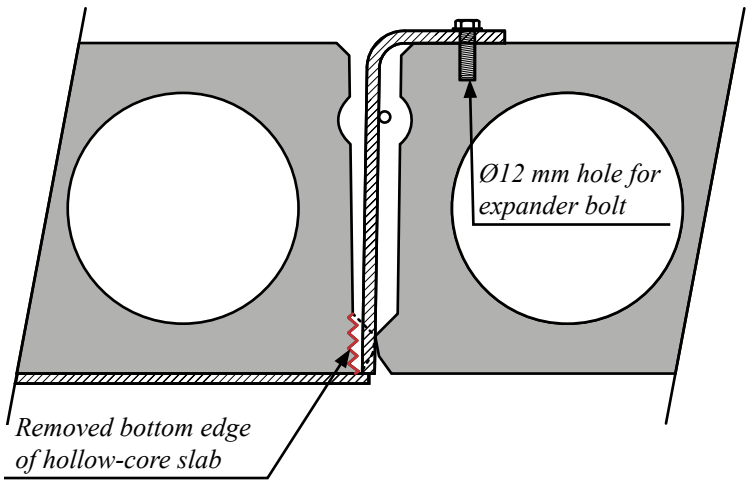

The gap between PETRA and the hollow-core slab should be fully cast when concreting the floor. The concrete should be hardened before applying loads to the floor. Lifting loops welded on the front plate are used in the manufacturing and shipping process. They can be removed before PETRA is installed on-site.

PETRA must be installed on an undamaged edge of hollow-core slab.

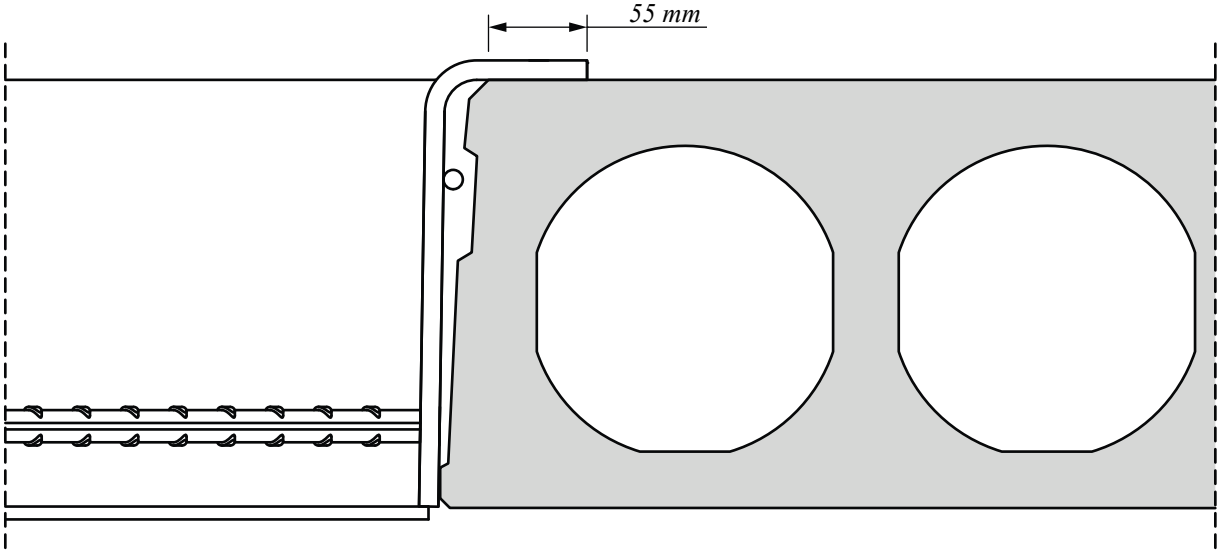

It is not allowed to support PETRA on the area of empty non-reinforced hollow.

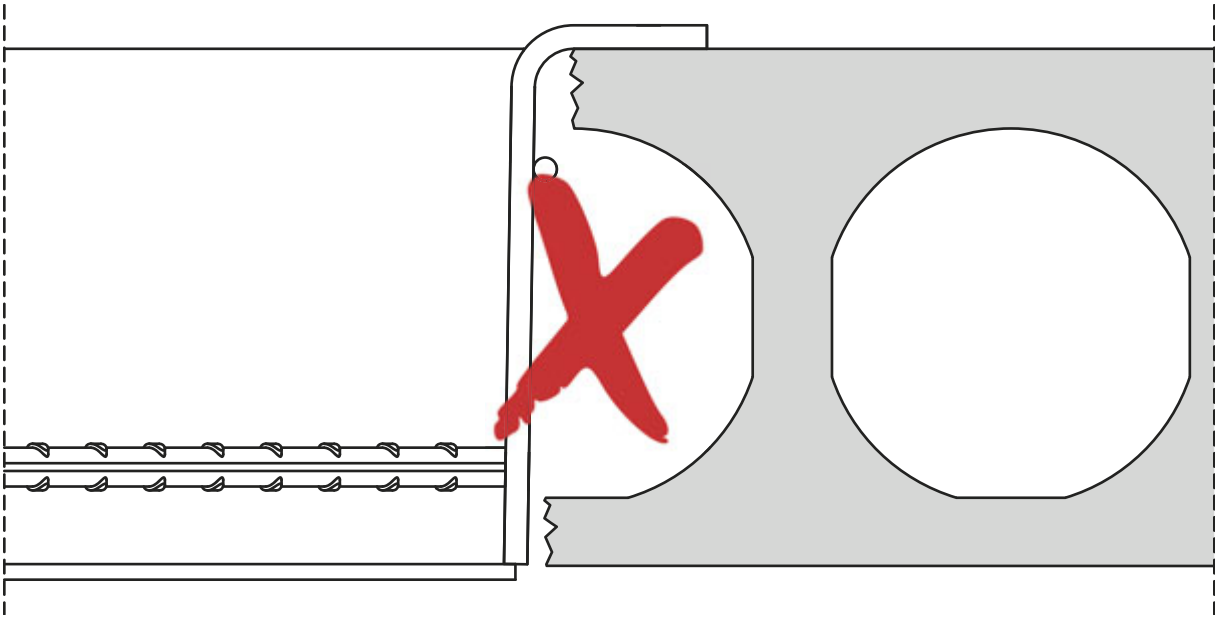

Two hollows must be connected, reinforced, casted and designed to support PETRA when there is a need to support PETRA on the area of hollows.

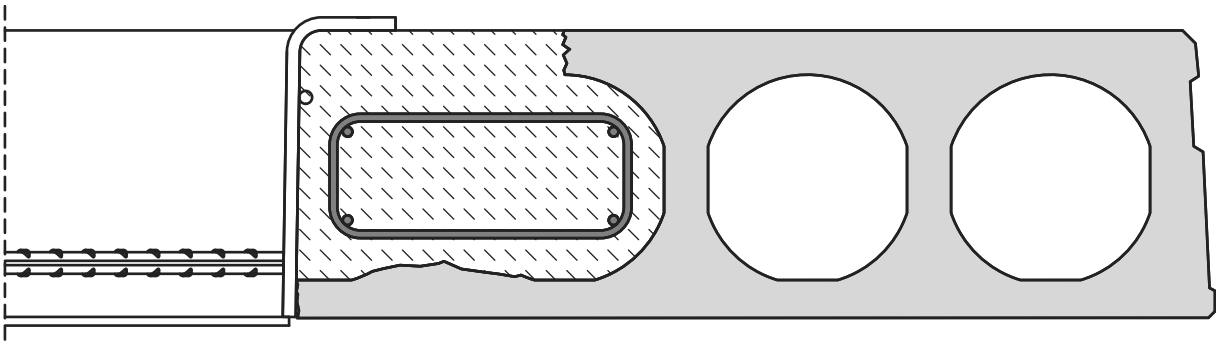

Technical Manual Revisions

Version: PEIKKO GROUP 09/2016. Revision:003*

- New cover design for 2018 added.

Resources

DESIGN TOOLS

Use our powerful software every day to make your work faster, easier, and more reliable. Peikko design tools include design software, 3D components for modeling programs, installation instructions, technical manuals, and product approvals of Peikko's products.

peikko.com/design-tools

TECHNICAL SUPPORT

Our technical support teams around the world are available to assist you with all of your questions regarding design, installation etc.

peikko.com/technical-support

APPROVALS

Approvals, certificates, and documents related to CE-marking (DoP, DoC) can be found on our websites under each products' product page.

peikko.com/products

EPDS AND MANAGEMENT SYSTEM CERTIFICATES

Environmental Product Declarations and management system certificates can be found at the quality section of our websites.

peikko.com/qehs

COMPANY WITH
MANAGEMENT SYSTEM
CERTIFIED BY DNV
ISO 9001 • ISO 14001
ISO 45001