TECHNICAL MANUAL

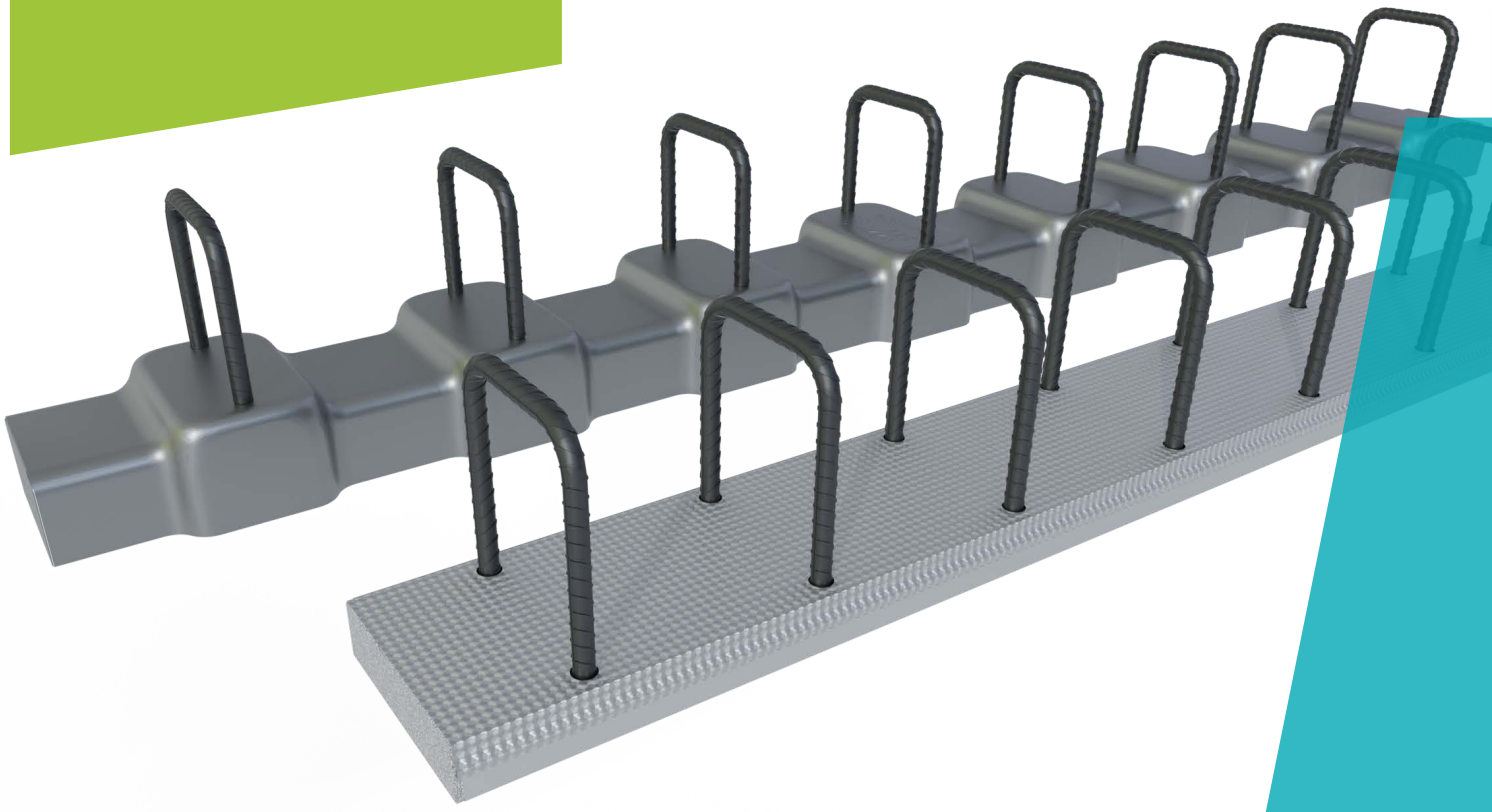

ARBOX® Plus, and ARBOX® Strong Joint Reinforcement

Effective Rebar Connection for Concrete Structures

Version PEIKKO GROUP 01/2024

peikko®

ARBOX® Joint Reinforcement

Effective Rebar Connection for Concrete Structures

- Cost- and time-effective installation to the formwork
- Ensuring the continuity of reinforcement at connections between concrete components
- Simple formwork design and joint design
- Transfer of longitudinal and transverse shear forces to the joint
- Highest possible resistance class with rough and indented surfaces according to EN 1992-1-1, Section 6.2.5

ARBOX® Joint Reinforcement is a system for creating connections between concrete elements. The unit is used to simplify formwork at construction joint in reinforced concrete structures. Pre-bent rebars are installed into a galvanized steel box that can be easily attached to formwork without the need to drill holes or make other adjustments to the formwork.

Pre-bent rebars are straightened when required and the process can be continued by overlapping rebars with the main reinforcement of the connected concrete member. This system provides a high production speed with reliable quality for concrete connections in both cast-in-situ and precast structures, as well as for combinations of concrete and CLT materials.

ARBOX® is available in two different roughness's of the box. **Rough surface** as **ARBOX® Plus** in longitudinal direction, and **Indented surface** of the box as **ARBOX® Plus in transverse direction** and **ARBOX® Strong in both directions**, with various widths of the box from 45 mm up to 225 mm. Various shapes of the rebars with diameters of 8 mm, 10 mm and 12 mm, make this system highly versatile. The suitable ARBOX® Joint Reinforcement model can be easily selected by using tables in the ARBOX® Joint Reinforcement Technical manual based on required resistance and dimensions.

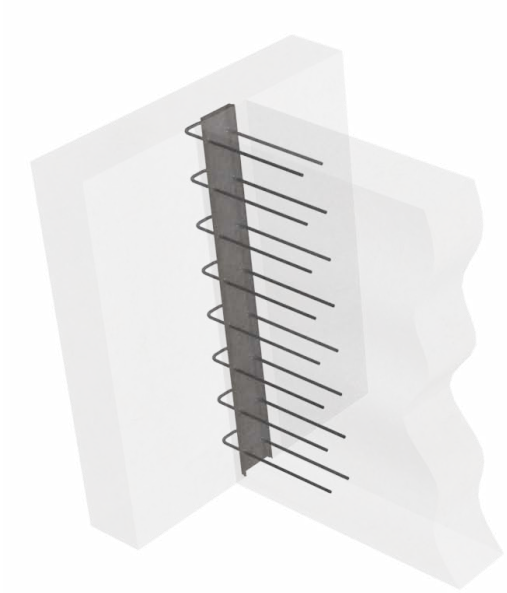

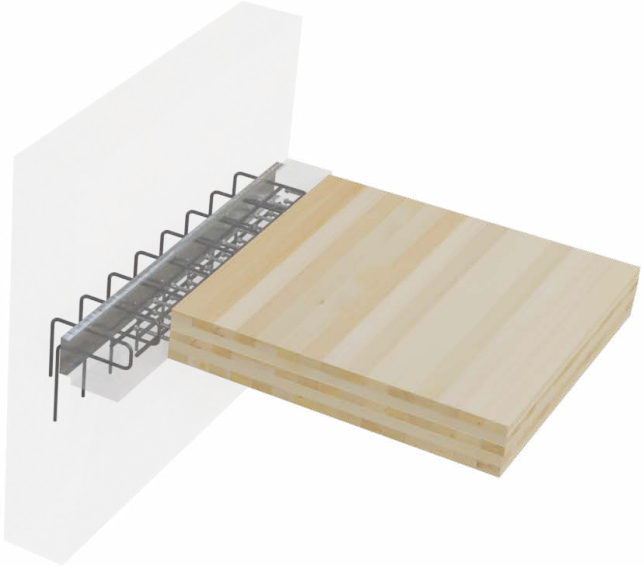

peikko®

www.peikko.com

CONTENTS

About ARBOX® Joint Reinforcement

1. Product properties

ARBOX Joint Reinforcement is available in two types, ARBOX Plus, covered by ETA, and ARBOX Strong, both with reinforcement diameters of 8mm, 10 mm and 12 mm.

ARBOX® Joint Reinforcement is used to efficiently connect concrete components that are cast in different phases. It consists of a galvanized steel box with pre-bent rebars, which are installed within the box and enclosed by a protective steel or plastic cover. Each end of the unit is secured to prevent the ingress of concrete. ARBOX® Joint Reinforcement is available in two main resistance classes based on surface treatment of the box– Rough, and Indented. Rough classes have six basic models and Indented surface has one model, with various box widths (see *Table 1 - Table 3*).

ARBOX® Plus Joint Reinforcement unit

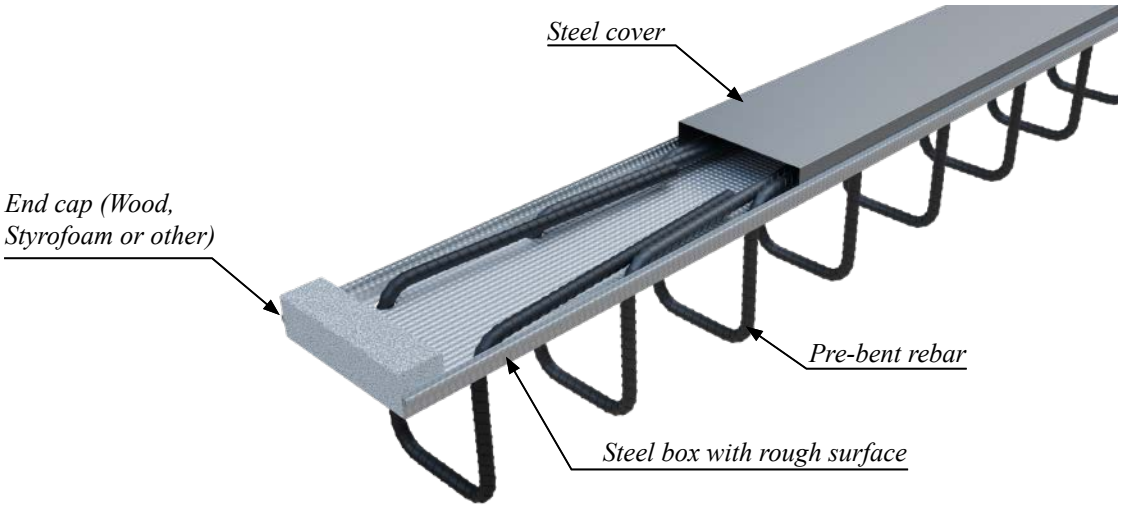

ARBOX® Strong Joint Reinforcement unit

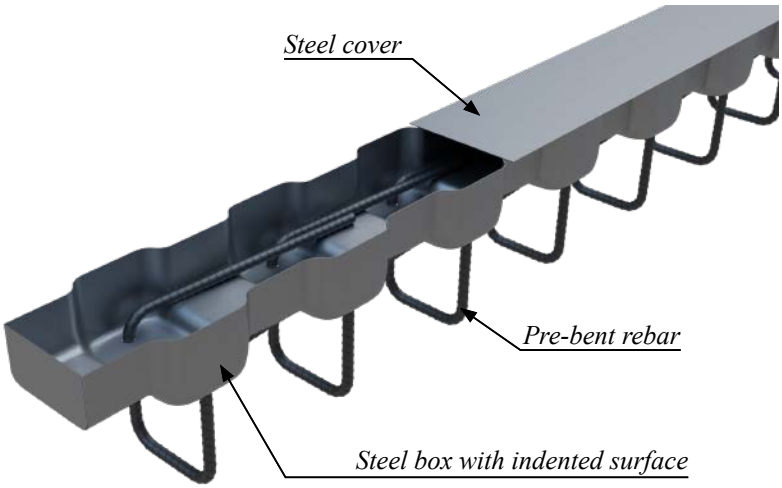

ARBOX® Plus models depended on the shape of reinforcement

Covered by ETA

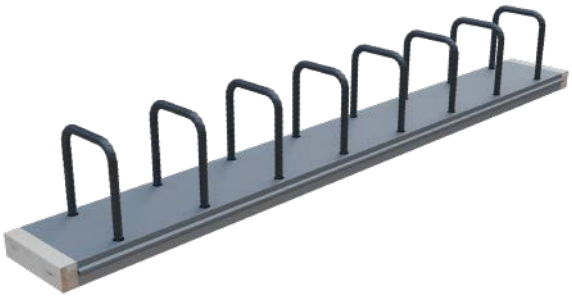

Model A

Model with two rows of anchor bars where the straight part of the reinforcement is bent inside the box

Covered by ETA

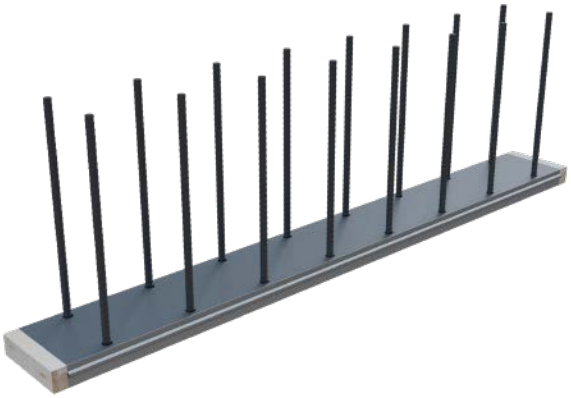

Model K

Model with two rows of anchor bars where the loop part of the reinforcement is bent inside the box

Covered by ETA

Model C

Model with two bent rows of anchor bars where the loop part of the reinforcement is bent inside the box; primarily designed for short cantilevers

Covered by ETA

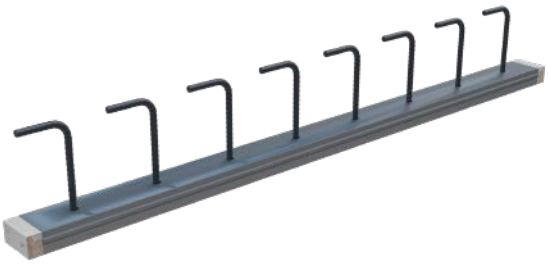

Model L

Model with a row of anchor bars where the hook is parallel with the box and the straight part of the reinforcement is bent inside the box

Covered by ETA

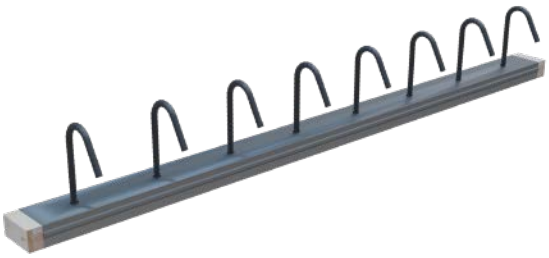

Model J

Model with a row of anchor bars where the hook is perpendicular to the box and the straight part of the reinforcement is bent inside the box

Covered by ETA

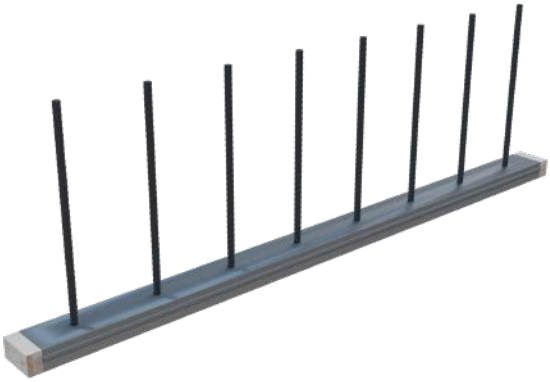

Model I

Model with a row of anchor bars where one straight part of the reinforcement is bent inside the box

ARBOX® Strong - model with Indented surface of the box

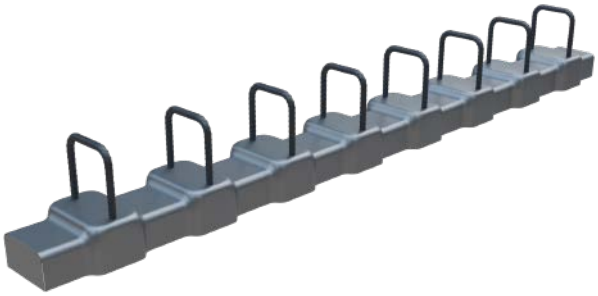

Model A

Model with two rows of anchor bars where the straight part of the reinforcement is bent inside the box

1.1 Structural behavior

ARBOX® Joint Reinforcement is designed to transfer shear loads acting longitudinally or transversely to the joint into concrete. Shear force is transferred between concrete elements by friction at joint interfaces. The friction resistance is enhanced by reinforcement bars placed across the joint.

SHEAR LOAD LONGITUDINAL TO THE JOINT

Example: wall–wall connection

Acting load	Application	Horizontal section
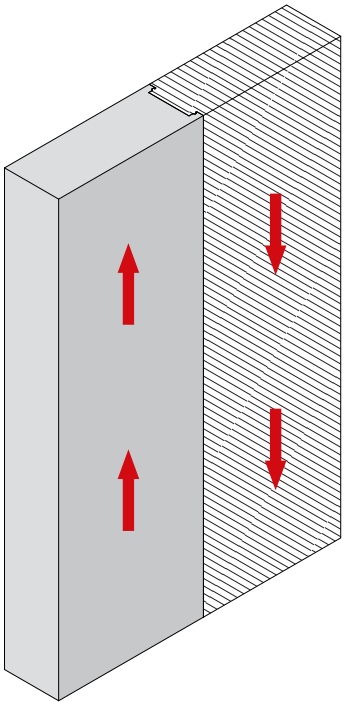	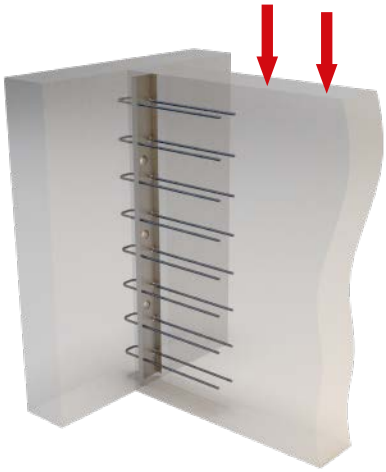	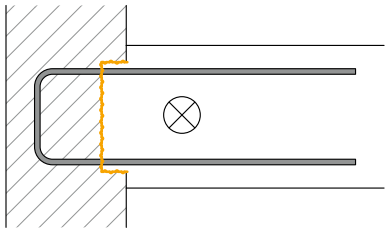
	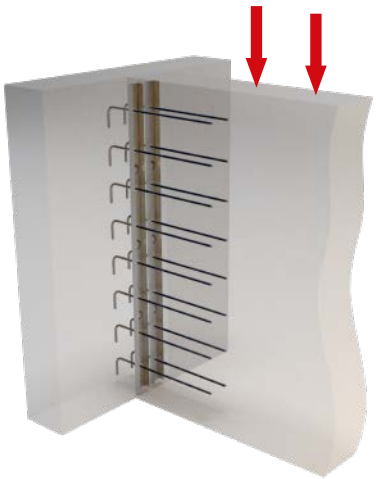	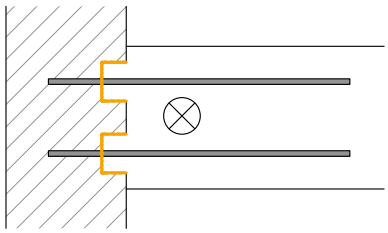

SHEAR LOAD TRANSVERSE TO THE JOINT

Example: wall-to-floor slab connection

Acting load	Application	Vertical section
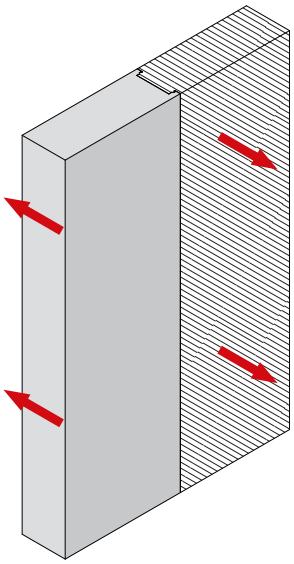	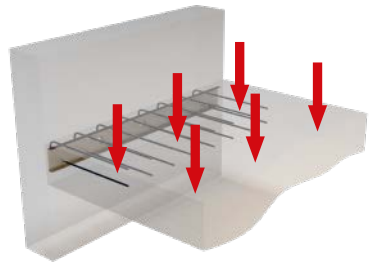	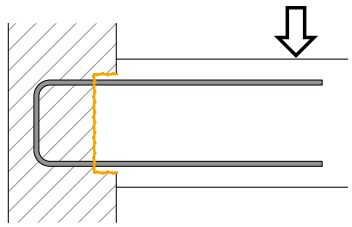
	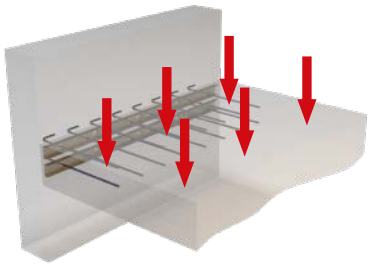	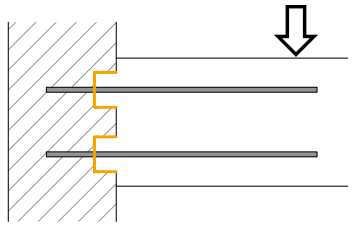

1.2 Application conditions

ARBOX® Joint Reinforcement is designed to be used under the conditions stated in this chapter. If these conditions are not met, please contact Peikko Technical Support for a custom design of an ARBOX® Joint Reinforcement.

1.2.1 Loading and environmental conditions

ARBOX® Joint Reinforcement is designed to carry static loads. It is designed to be used indoors and in dry conditions. When using ARBOX® Joint Reinforcement in other conditions, the surface treatment, concrete cover, and raw materials must be suitable for the environmental exposure class and operating life.

1.2.2 Positioning of the ARBOX® Joint Reinforcement

The precise position of the ARBOX® Joint Reinforcement is indicated in the design drawings. ARBOX® Joint Reinforcement must be fixed to the formwork in the way that it cannot be displaced during casting.

Units can be fixed to formwork by nailing or securing them with a tie wire to the reinforcement. ARBOX® Joint Reinforcements are installed into position while keeping a minimal concrete cover. The minimum concrete cover c_{nom} for ARBOX® Joint Reinforcement is 30 mm.

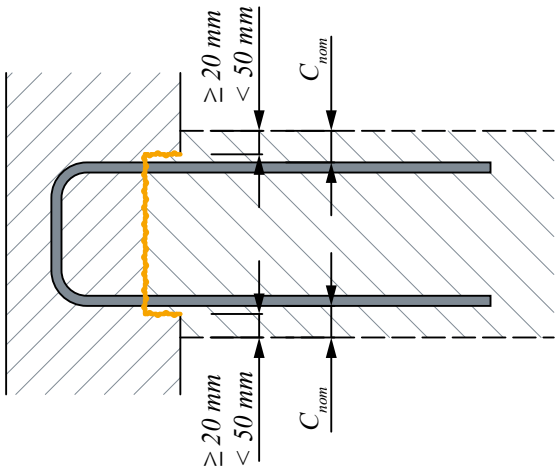

Figure 1. Minimum concrete cover.

1.3 Materials and dimensions

The standard properties of ARBOX® Joint Reinforcement are guaranteed in reinforced concrete structures with concrete grade C20/25 and higher. ARBOX® Joint Reinforcement is made of rebars and galvanized steel sheets with the following properties:

Rebars
Material B500B EN 10080
Diameter 8, 10, 12 mm

Box
Material Galvanized sheet metal
Unit length L = 1,250 mm

Model	Surface type	Material		
		Rebars		Box
ARBOX® Plus	Rough	B500B	EN 10080	HDG
ARBOX® Strong	Intended	B500B	EN 10080	HDG

Hydrotite
Material Hydrophilic rubber middle expansion type
Dimension t2 × w20 mm

Item	Unit	References
Hardness	JIS	50 ±5
Tensile Strength	MPa	min. 2.45
Elongation	%	min. 600
Expansion rate	%	min. 500

In the construction joint that is exposed to water pressure, ARBOX® Plus can be supplemented by highly active sealant strip on both sides of the box. A superior water sealant known as Hydrotite has a unique double action system. The rubber between two surfaces absorbs water thus expanding within the joint gap. The possibility to include Hydrotite type relates to following models: Model A, Model K and Model C.

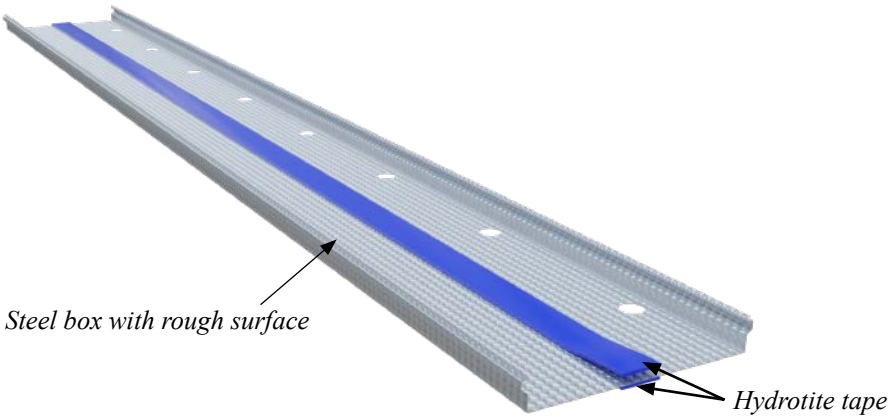

Figure 2. ARBOX® Plus supplemented by Hydrotite.

Peikko Group's production units are externally controlled and periodically audited on the basis of production certifications and product approvals by various independent organizations.

The products bear the inspection mark, the emblem of Peikko Group, the type of product, and the year and week of manufacturing.

ARBOX® Plus (ETA)

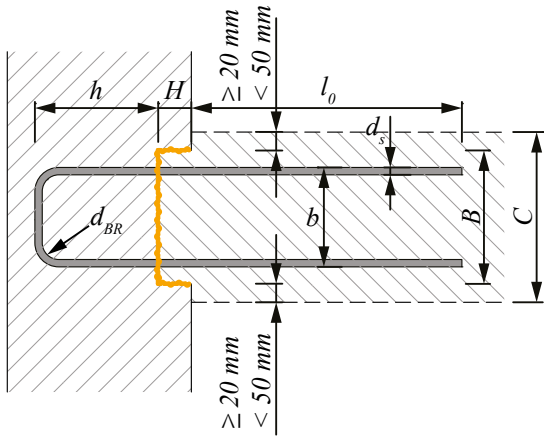

Figure 3. ARBOX® Plus model A dimensions.

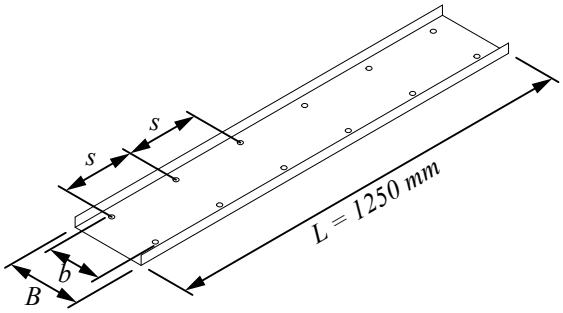

Figure 4. Basic dimensions of steel box.

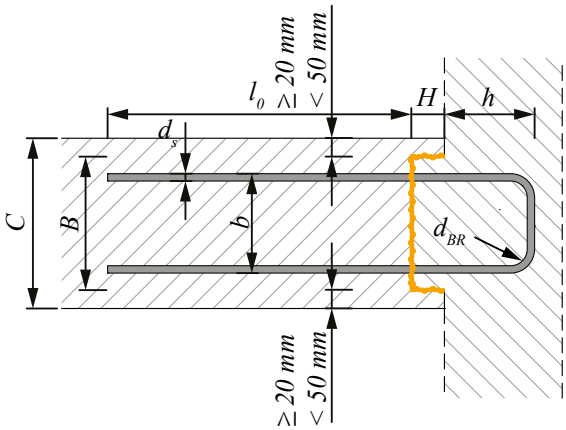

Figure 5. ARBOX® Plus model K dimensions.

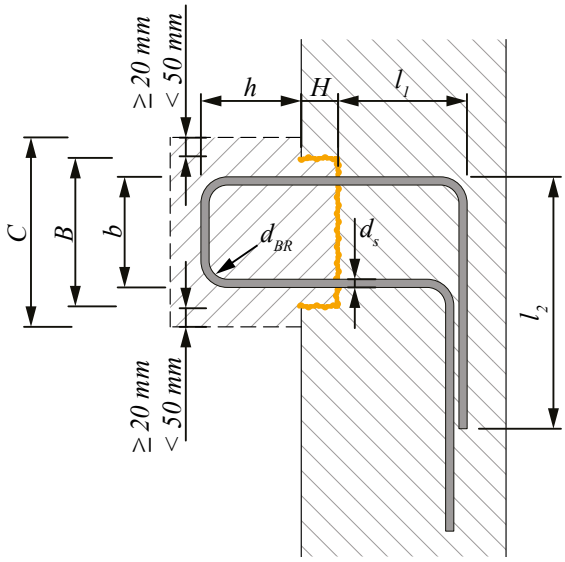

Figure 6. ARBOX® Plus model C dimensions. (l_1 = 100 mm as a standard).

Note: The length of the box L is standardized for all models, L = 1,250 mm.
The minimum mandrel diameter d_{BR} presented in the figures are defined according to EN 1992-1-1:2004, Section 8.

Table 1. ARBOX® Plus model A, model K and model C product dimensions.

Type X = A, K or C	Diameter d_s [mm]	Rebar spacing s [mm]	Box width B [mm]	Rebar width b [mm]	Box height H [mm]	Lap length l_o [mm]	Hook length h [mm]	Anchorage length l_2 [mm]	Component thickness C [mm]
ARBOX® Plus X- 8-150-85	8	150	85	60	36	330	134	220	≥ 125
ARBOX® Plus X- 8-200-85	8	200	85	60	36	330	134	220	≥ 125
ARBOX® Plus X- 8-300-85	8	300	85	60	36	330	134	220	≥ 125
ARBOX® Plus X- 8-150-115	8	150	115	90	36	330	134	220	≥ 155
ARBOX® Plus X- 8-200-115	8	200	115	90	36	330	134	220	≥ 155
ARBOX® Plus X- 8-300-115	8	300	115	90	36	330	134	220	≥ 155
ARBOX® Plus X- 8-150-145	8	150	145	120	36	330	134	220	≥ 185
ARBOX® Plus X- 8-200-145	8	200	145	120	36	330	134	220	≥ 185
ARBOX® Plus X- 8-300-145	8	300	145	120	36	330	134	220	≥ 185
ARBOX® Plus X- 8-150-175	8	150	175	150	36	330	134	220	≥ 215
ARBOX® Plus X- 8-200-175	8	200	175	150	36	330	134	220	≥ 215
ARBOX® Plus X- 8-300-175	8	300	175	150	36	330	134	220	≥ 215
ARBOX® Plus X- 8-150-205	8	150	205	180	36	330	134	220	≥ 245
ARBOX® Plus X- 8-200-205	8	200	205	180	36	330	134	220	≥ 245
ARBOX® Plus X- 8-300-205	8	300	205	180	36	330	134	220	≥ 245
ARBOX® Plus X- 8-150-225	8	150	225	200	36	330	134	220	≥ 265
ARBOX® Plus X- 8-200-225	8	200	225	200	36	330	134	220	≥ 265
ARBOX® Plus X- 8-300-225	8	300	225	200	36	330	134	220	≥ 265
ARBOX® Plus X- 10-150-85	10	150	85	60	50	410	134	280	≥ 125
ARBOX® Plus X- 10-200-85	10	200	85	60	50	410	134	280	≥ 125
ARBOX® Plus X- 10-300-85	10	300	85	60	50	410	134	280	≥ 125
ARBOX® Plus X- 10-150-115	10	150	115	90	36	410	134	280	≥ 155
ARBOX® Plus X- 10-200-115	10	200	115	90	36	410	134	280	≥ 155
ARBOX® Plus X- 10-300-115	10	300	115	90	36	410	134	280	≥ 155
ARBOX® Plus X- 10-150-145	10	150	145	120	36	410	134	280	≥ 185
ARBOX® Plus X- 10-200-145	10	200	145	120	36	410	134	280	≥ 185
ARBOX® Plus X- 10-300-145	10	300	145	120	36	410	134	280	≥ 185
ARBOX® Plus X- 10-150-175	10	150	175	150	36	410	134	280	≥ 215
ARBOX® Plus X- 10-200-175	10	200	175	150	36	410	134	280	≥ 215
ARBOX® Plus X- 10-300-175	10	300	175	150	36	410	134	280	≥ 215
ARBOX® Plus X- 10-150-205	10	150	205	180	36	410	134	280	≥ 245
ARBOX® Plus X- 10-200-205	10	200	205	180	36	410	134	280	≥ 245
ARBOX® Plus X- 10-300-205	10	300	205	180	36	410	134	280	≥ 245
ARBOX® Plus X- 10-150-225	10	150	225	200	36	410	134	280	≥ 265
ARBOX® Plus X- 10-200-225	10	200	225	200	36	410	134	280	≥ 265
ARBOX® Plus X- 10-300-225	10	300	225	200	36	410	134	280	≥ 265
ARBOX® Plus X- 12-150-115	12	150	115	90	50	490	134	360	≥ 155
ARBOX® Plus X- 12-200-115	12	200	115	90	50	490	134	360	≥ 155
ARBOX® Plus X- 12-300-115	12	300	115	90	50	490	134	360	≥ 155
ARBOX® Plus X- 12-150-145	12	150	145	120	36	490	134	360	≥ 185
ARBOX® Plus X- 12-200-145	12	200	145	120	36	490	134	360	≥ 185
ARBOX® Plus X- 12-300-145	12	300	145	120	36	490	134	360	≥ 185

ARBOX® Plus X- 12-150-175	12	150	175	150	36	490	134	360	≥ 215
ARBOX® Plus X- 12-200-175	12	200	175	150	36	490	134	360	≥ 215
ARBOX® Plus X- 12-300-175	12	300	175	150	36	490	134	360	≥ 215
ARBOX® Plus X- 12-150-205	12	150	205	180	36	490	134	360	≥ 245
ARBOX® Plus X- 12-200-205	12	200	205	180	36	490	134	360	≥ 245
ARBOX® Plus X- 12-300-205	12	300	205	180	36	490	134	360	≥ 245
ARBOX® Plus X- 12-150-225	12	150	225	200	36	490	134	360	≥ 265
ARBOX® Plus X- 12-200-225	12	200	225	200	36	490	134	360	≥ 265
ARBOX® Plus X- 12-300-225	12	300	225	200	36	490	134	360	≥ 265

Note 1: When ordering, letter X shall be replaced with the correct letter based on the chosen ARBOX® Plus model (A, K or C), e.g. ARBOX® Plus K-8-150-85.

Note 2: For model C (*Figure 6*) dimension l_1 is 100 mm as a standard. If another length for l_1 dimension is required, please contact Peikko Customer Engineering. The dimension l_2 is calculated according to anchorage length l_{bd} specified in *Table 3*.

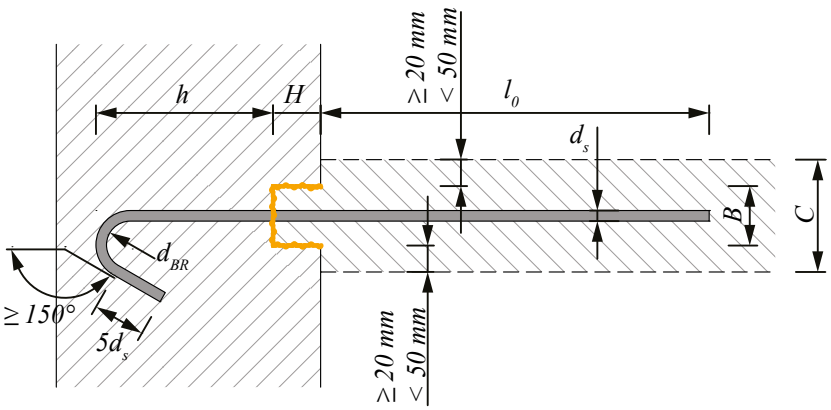

Figure 7. ARBOX® Plus J dimensions.

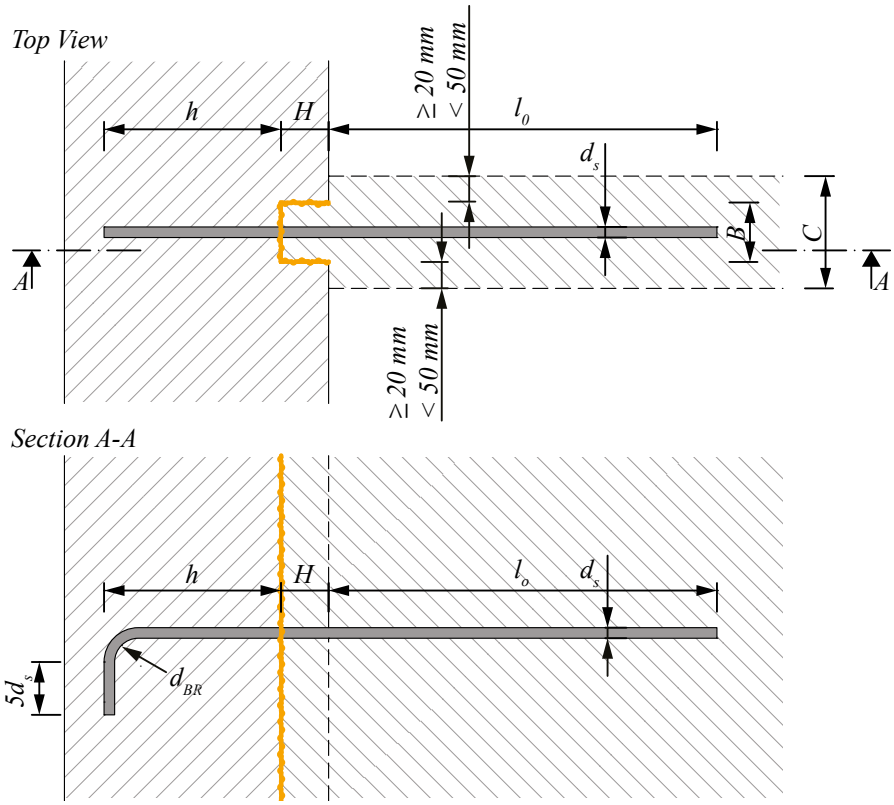

Figure 8. ARBOX® Plus L dimensions.

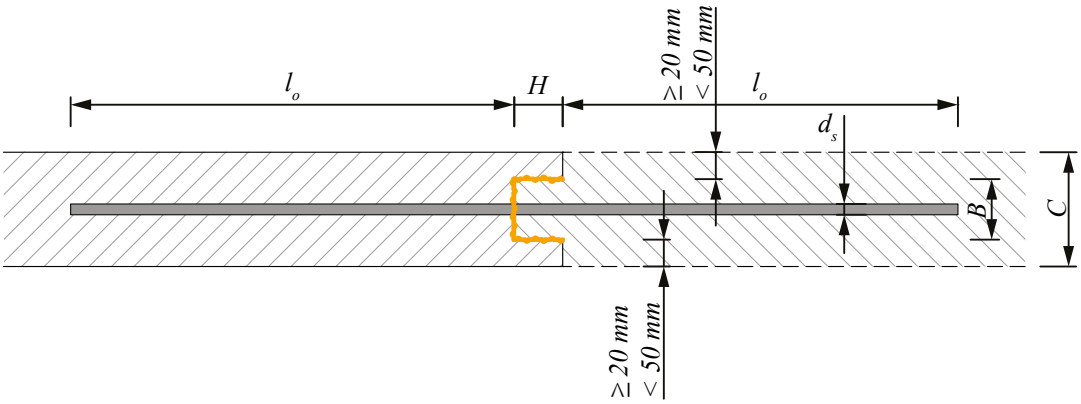

Figure 9. ARBOX® Plus I dimensions.

The minimum mandrel diameter d_{BR} presented in the figures are defined according to EN 1992-1-1:2004, Section 8.

Table 2. ARBOX® Plus model L, model J and model I product dimensions.

Type X = L, J or I	Diameter d_s [mm]	Rebar spacing s [mm]	Box width B [mm]	Lap length l_o [mm]	Hook length h [mm]	Box height H [mm]	Component thickness C [mm]
ARBOX® Plus X-8-150-45	8	150	45	330	134	36	≥ 85
ARBOX® Plus X-8-300-45	8	300	45	330	134	36	≥ 85
ARBOX® Plus X-10-150-60	10	150	60	410	134	36	≥ 100
ARBOX® Plus X-10-300-60	10	300	60	410	134	36	≥ 100
ARBOX® Plus X-12-150-75	12	150	75	490	134	36	≥ 115
ARBOX® Plus X-12-300-75	12	300	75	490	134	36	≥ 115

Note: When ordering, letter X shall be replaced with the correct letter based on the chosen ARBOX® Plus model (L, J or I), e.g. ARBOX® Plus J-8-150-45.

ARBOX® Strong

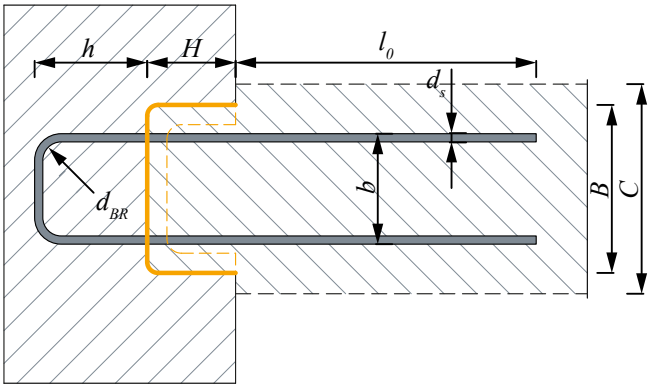

Figure 10. ARBOX® Strong A dimensions.

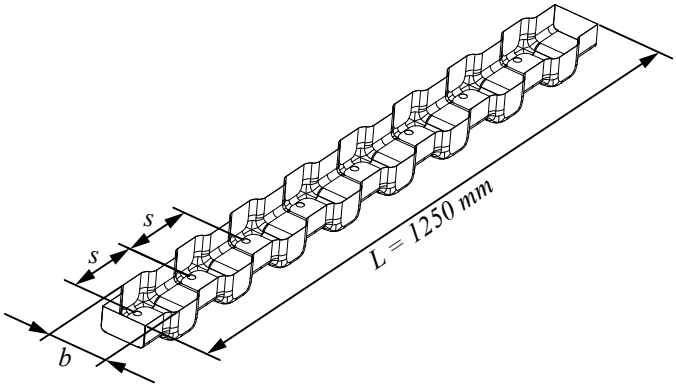

Figure 11. Basic dimensions of steel box.

Table 3. ARBOX® Strong A Joint Reinforcement product dimensions.

Type	Diameter d_s [mm]	Rebar spacing s [mm]	Box width B [mm]	Rebar width b [mm]	Box height H [mm]	Lap length l_o [mm]	Hook length h [mm]	Anchorage length l_{bd} [mm]	Component thickness C [mm]
ARBOX® Strong A- 8-150-115	8	150	115	90	60.5	330	130	220	≥ 155
ARBOX® Strong A- 8-300-115	8	300	115	90	60.5	330	130	220	≥ 155
ARBOX® Strong A-8-150-145	8	150	145	120	60.5	330	130	220	≥ 185
ARBOX® Strong A-8-300-145	8	300	145	120	60.5	330	130	220	≥ 185
ARBOX® Strong A-8-150-175	8	150	175	150	50.5	330	130	220	≥ 215
ARBOX® Strong A-8-300-175	8	300	175	150	50.5	330	130	220	≥ 215
ARBOX® Strong A-8-150-215	8	150	215	200	50.5	330	130	220	≥ 255
ARBOX® Strong A-8-300-215	8	300	215	200	50.5	330	130	220	≥ 255
ARBOX® Strong A- 10-150-115	10	150	115	90	60.5	410	130	280	≥ 155
ARBOX® Strong A-10-300-115	10	300	115	90	60.5	410	130	280	≥ 155
ARBOX® Strong A-10-150-145	10	150	145	120	60.5	410	130	280	≥ 185
ARBOX® Strong A-10-300-145	10	300	145	120	60.5	410	130	280	≥ 185
ARBOX® Strong A-10-150-175	10	150	175	150	50.5	410	130	280	≥ 215
ARBOX® Strong A-10-300-175	10	300	175	150	50.5	410	130	280	≥ 215
ARBOX® Strong A-10-150-215	10	150	215	200	50.5	410	130	280	≥ 255
ARBOX® Strong A- 10-300-215	10	300	215	200	50.5	410	130	280	≥ 255
ARBOX® Strong A-12-150-115	12	150	115	90	60.5	490	130	360	≥ 155
ARBOX® Strong A-12-300-115	12	300	115	90	60.5	490	130	360	≥ 155
ARBOX® Strong A-12-150-145	12	150	145	120	60.5	490	130	360	≥ 185
ARBOX® Strong A-12-300-145	12	300	145	120	60.5	490	130	360	≥ 185
ARBOX® Strong A-12-150-175	12	150	175	150	50.5	490	130	360	≥ 215
ARBOX® Strong A-12-300-175	12	300	175	150	50.5	490	130	360	≥ 215
ARBOX® Strong A-12-150-215	12	150	215	200	50.5	490	130	360	≥ 255
ARBOX® Strong A-12-300-215	12	300	215	200	50.5	490	130	360	≥ 255

General product code principles

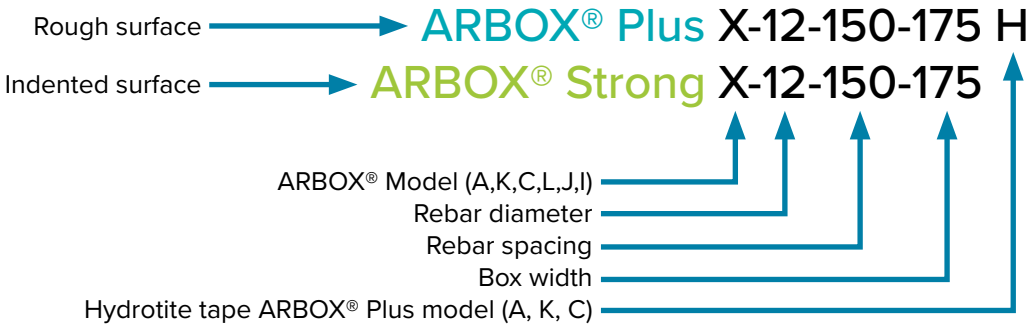

Note 1: For model C add dimension l_l at the end of product code, e.g. ARBOX C-10-200-205 l_l = 200.
Note 2: If there is need for product with customized lengths, please contact Peikko Customer Engineering.

2. Resistances

The design values of shear load resistance for structural joints using ARBOX® Joint Reinforcement are determined according to following standards:

1. **Bulletin, DBV.** *Rebending of reinforcement steel and requirements for continuity strips according to Eurocode 2.*
2. **EN 1992-1-1:2004/AC:2010.** *Design of concrete structures - Part 1-1: General rules and rules for buildings.*
3. **ETA 23/0895** of 19/12/2023.

The resistances of structural joints against longitudinal shear are summarized in *Tables 4 – 6*. The resistances of structural joints against transverse shear are summarized in *Tables 7 – 9*. The bending resistances of structural joints are summarized in *Table 10*.

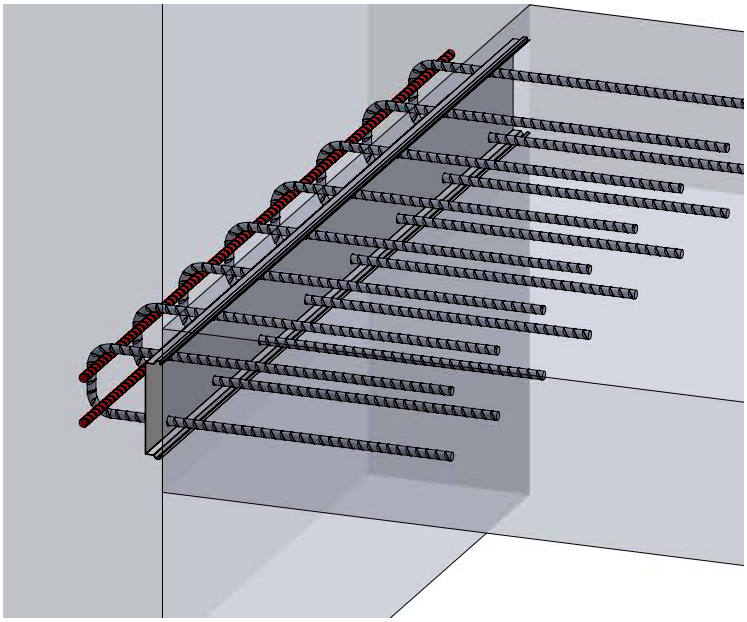

Example of anchorage

The reinforcement shall be anchored in the concrete according to EN 1992-1-1, 8.3 (3).

2.1 Load transfer and verifications of ARBOX® Plus according to EN 1992-1-1

2.1.1 Shear resistance in longitudinal direction to the concrete joint

Shear load resistance longitudinal to the concrete joint:

$$V_{Rd,||} = c \times f_{ctd} + \rho \times f_{yd,red} \times (\mu \times sin\ a) \qquad V_{Ed} \leq V_{Rd,||}$$

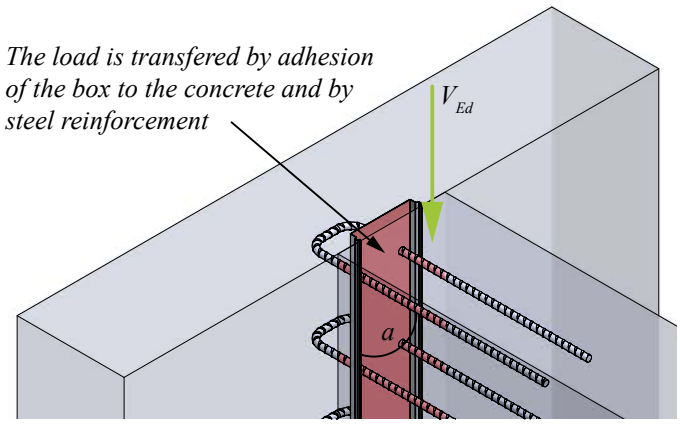

Where:

c	=	0.4 - parameter (rough surface)
μ	=	0.7
f_{ctd}	=	design value of concrete tensile strength
ρ	=	reinforcement ratio
$f_{yd,red}$	=	design yield strength of the reinforcement reduced to 80 % due to rebending actions

2.1.2 Shear resistance in perpendicular direction to the concrete joint

$V_{Ed} \leq V_{Rd,\perp}$ $\qquad$ $V_{Ed} \leq V_{Rd,\perp,PSB}$

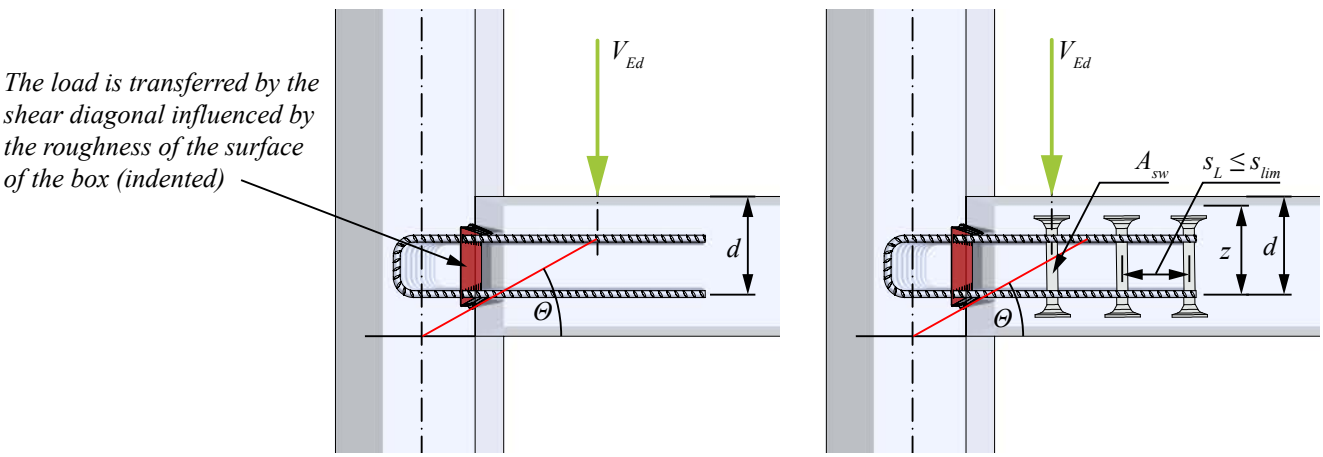

Shear load resistance transverse to the concrete joint:

$$V_{Rd,\perp} = \frac{c}{0.5} \times \left[\frac{0.18}{\gamma_c} \times k \times (100 \times \rho_l \times f_{ck})^{1/3} \right] \times b_w \times d$$

Shear resistance transverse to the concrete joint with PSB® or PSB®-S shear reinforcement (EN 1992-1-1, 6.2.3):

$$V_{Rd,\perp,s} = \frac{A_{sw}}{s_L} \times z \times f_{ywd} \times cot\theta$$

$$V_{Rd,\perp,max} = 1/3 \times \frac{\alpha_{cw} \times b_w \times z \times v_1 \times f_{cd}}{cot\theta + tan\theta}$$

$$V_{Rd,\perp,PSB} = min(V_{Rd,\perp,s}; V_{Rd,\perp,max})$$

Where:

c = 0.5 - parameter (indented surface)

γ_c = partial safety factor

k = $min\left(1+\left(\frac{200}{d}\right)^{0.5};2\right)$

ρ_l = reinforcement ratio

f_{ck} = characteristic value of concrete compression strength

b_w = width of the slab, 1 m

d = effective depth of a cross-section

θ = $1 \leq cot\ (\theta) \leq 2.5$ (EN 1992-11, 6.2.3, Eq. 6.7N)

A_{sw} = area of PSB® headed studs in one row along the wall

z = arm of forces in slab cross-section

s_L = spacing of PSB® headed studs, acc. to EN 1991-1-1, 9.3.2

f_{ywd} = design yield strength of the PSB® headed studs

f_{cd} = design value of concrete compression strength

α_{cw} = coefficient of the stress in the compression chord

v_1 = strength reduction factor for cracked concrete

s_{lim} = maximum spacing of PSB® headed studs, acc. to EN 1991-1-1, 9.3.2

A stepped distribution of the shear reinforcement may be used, as indiicated in EN 1992-1-1, 6.2.5 (*Figure 6.10*).

If PSB® or PSB®-S headed studs are used as shear reinforcement of the slab, it is necassary to use installation requirements defined in PSB® Headed Anchors Technical Manual, or to contact Peikko Technical Support.

2.1.3 Bending moment resistance in perpendicular direction to the connection of the slab and wall

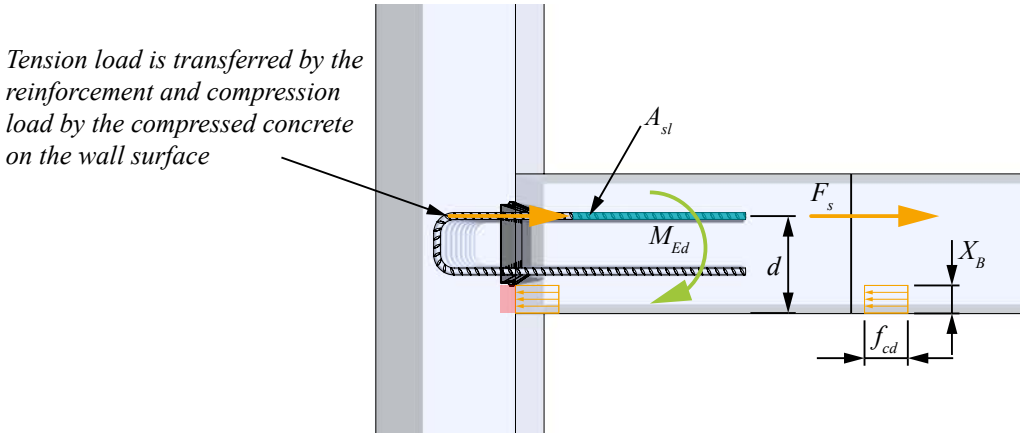

Bending moment resistance of the joint:

$$M_{Rd} = x_B \times b_w \times f_{cd} \times \left(d - \frac{x_B}{2}\right) \qquad M_{Ed} \leq M_{Rd}$$

Where:

x_B = height of the compression zone

$$x_B = \frac{A_{sl} \times f_{yd,red}}{b_w \times f_{cd}}$$

A_{sl} = area of the reinforcement in tension

The decrease in the reinforcement´s yield strength by 20% caused by re-bending actions must be considered.

2.1.4 Interaction of forces V_{Ed} and M_{Ed}

In case of interaction of shear force and bending moment, each verification shall be made separately. The connection is designed correctly, if both verifications according to chapters 2.1.2 and 2.1.3 are fulfilled.

NOTE:
The additional tensile force ΔF_{td} in the longitudinal reinforcement shall be taken into account according to EN 1992-1-1, 6.2.3 (6.18). This force shall be considered in verification of bending moment resistance ($M_{Ed,max} = M_{Ed} + \Delta F_{td} \cdot z$).

In case of interaction of longitudinal shear force, transverse shear force and bending moment, contact Peikko Technical Support.

2.2 Shear load resistance of ARBOX® Plus longitudinal to the concrete joint

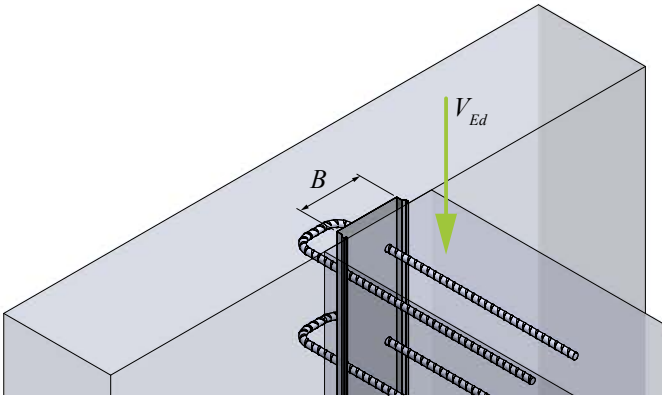

Figure 12. Force acting longitudinal to joint.

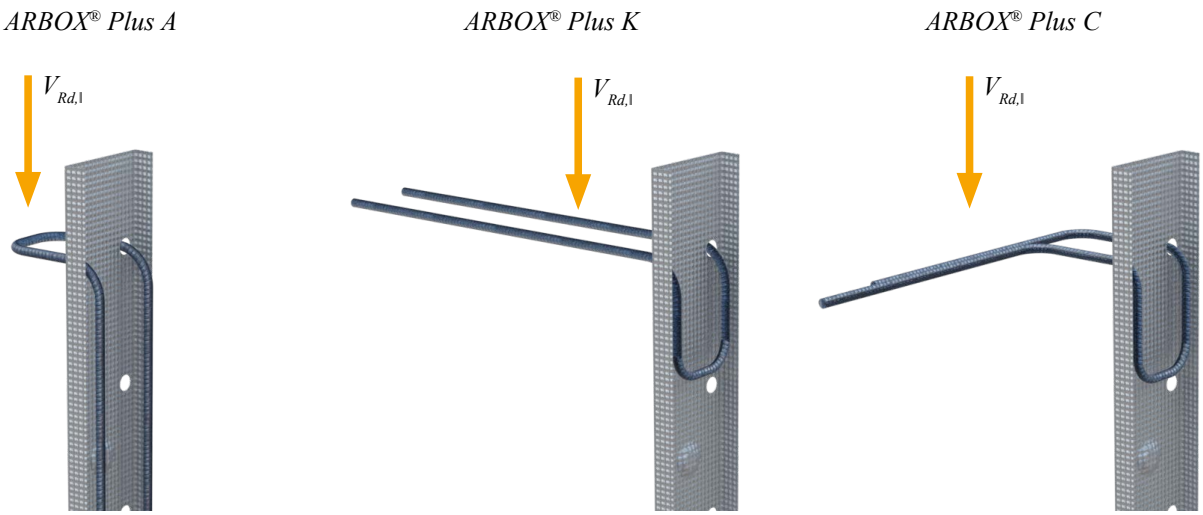

Table 4. Shear load resistance longitudinal to the concrete joint of ARBOX® Plus A, ARBOX® Plus K and ARBOX® Plus C.

	Shear resistance $V_{Rd,l}$ [kN/m]																	
diameter/spacing [mm/mm]	Box width B [mm]																	
	85			115			145			175			205			225		
	C20/25	C25/30	C30/37	C20/25	C25/30	C30/37	C20/25	C25/30	C30/37	C20/25	C25/30	C30/37	C20/25	C25/30	C30/37	C20/25	C25/30	C30/37
8/300	115.6	122.4	126.9	127.6	136.8	142.9	139.6	151.2	158.9	151.6	165.6	174.9	163.6	180.0	190.9	171.6	189.6	201.6
8/200	156.4	163.2	167.7	168.4	177.6	183.7	180.4	192.0	199.7	192.4	206.4	215.7	204.4	220.8	231.7	212.4	230.4	242.4
8/150	197.2	204.0	208.5	209.2	218.4	224.5	221.2	232.8	240.5	233.2	247.2	256.5	245.2	261.6	272.5	253.2	271.2	283.2
10/300	161.5	168.3	172.8	173.5	182.7	188.8	185.5	197.1	204.8	197.5	211.5	220.8	209.5	225.9	236.8	217.5	235.5	247.5
10/200	225.2	232.0	236.6	237.2	246.4	252.6	249.2	260.8	268.6	261.2	275.2	284.6	273.2	289.6	300.6	281.2	299.2	311.2
10/150	289.0	295.8	300.3	301.0	310.2	316.3	313.0	324.6	332.3	325.0	339.0	348.3	337.0	353.4	364.3	345.0	363.0	375.0
12/300	-	-	-	212.8	222.0	228.2	224.8	236.4	244.2	236.8	250.8	260.2	248.8	265.2	276.2	256.8	274.8	286.8
12/200	-	-	-	296.3	305.5	311.6	308.3	319.9	327.6	320.3	334.3	343.6	332.3	348.7	359.6	340.3	358.3	370.3
12/150	-	-	-	379.7	388.9	395.0	391.7	403.3	411.0	403.7	417.7	427.0	415.7	432.1	443.0	423.7	441.7	453.7

ARBOX® Plus L

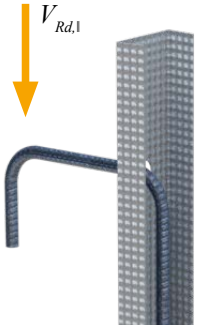

ARBOX® Plus J

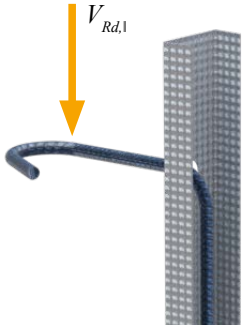

Table 5. Shear load resistance longitudinal to the concrete joint of ARBOX® Plus L and ARBOX® Plus J.

Shear resistance $V_{Rd,l}$ [kN/m]									
diameter/spacing [mm/mm]	Box width B [mm]								
	45			60			75		
	C20/25	C25/30	C30/37	C20/25	C25/30	C30/37	C20/25	C25/30	C30/37
8/300	54.1	62.4	64.8	-	-	-	-	-	-
8/150	90.2	90.2	105.6	-	-	-	-	-	-
10/300	-	-	-	69.1	82.9	92.1	-	-	-
10/150	-	-	-	114.2	137.1	152.3	-	-	-
12/300	-	-	-	-	-	-	78.9	94.7	105.2
12/150	-	-	-	-	-	-	127.8	153.3	170.4

ARBOX® Plus I

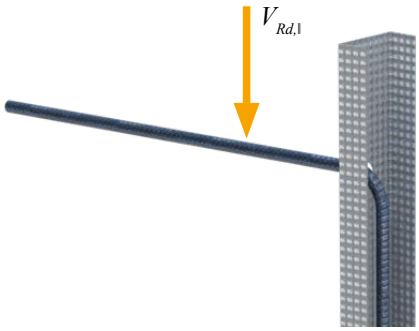

Table 6. Shear load resistance longitudinal to the concrete joint of ARBOX® Plus I.

Shear resistance $V_{Rd,l}$ [kN/m]									
diameter/spacing [mm/mm]	Box width B [mm]								
	45			60			75		
	C20/25	C25/30	C30/37	C20/25	C25/30	C30/37	C20/25	C25/30	C30/37
8/300	58.8	62.4	64.8	-	-	-	-	-	-
8/150	99.6	103.2	105.6	-	-	-	-	-	-
10/300	-	-	-	87.7	92.5	95.7	-	-	-
10/150	-	-	-	151.5	156.3	159.5	-	-	-
12/300	-	-	-	-	-	-	113.4	127.8	131.8
12/150	-	-	-	-	-	-	196.8	219.6	223.6

2.3 Shear load resistance of ARBOX® Plus transverse to the concrete joint

2.3.1 Shear resistance of ARBOX® Plus transverse to the concrete joint without shear reinforcement of the slab

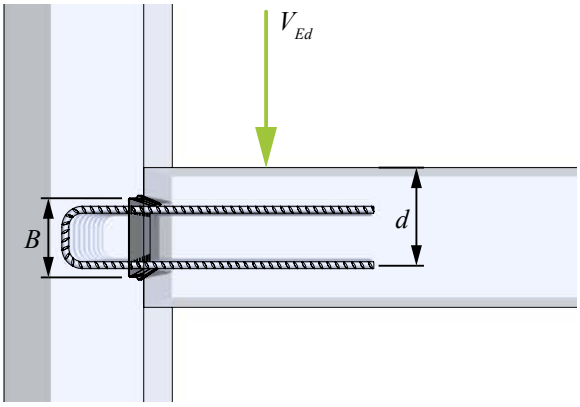

Figure 13. Force acting transverse to joint.

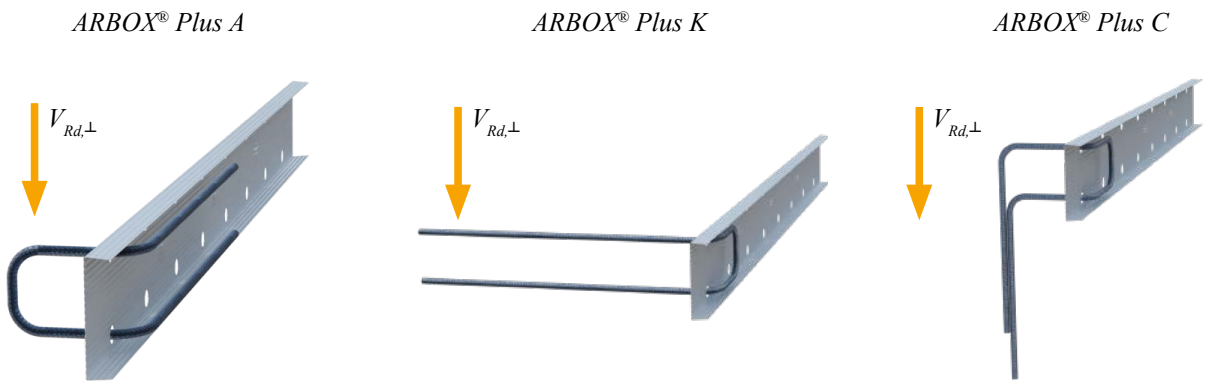

Table 7. Shear load resistance transverse to the concrete joint of ARBOX® Plus A, ARBOX® Plus K and ARBOX® Plus C.

Shear resistance $V_{Rd,\perp}$ [kN/m]																		
diameter/spacing [mm/mm]	*d* [mm]																	
	90			120			150			180			210			230		
	C20/25	C25/30	C30/37	C20/25	C25/30	C30/37	C20/25	C25/30	C30/37	C20/25	C25/30	C30/37	C20/25	C25/30	C30/37	C20/25	C25/30	C30/37
8/300	33.5	36.1	38.3	40.6	43.7	46.4	47.1	50.7	53.9	53.1	57.2	60.8	58.2	62.7	66.6	60.5	65.1	69.2
8/200	38.3	41.3	43.9	46.4	50.0	53.1	53.9	58.0	61.7	60.8	65.5	69.6	66.6	71.7	76.2	69.2	74.6	79.2
8/150	42.2	45.4	48.3	51.1	55.0	58.5	59.3	63.9	67.9	67.0	72.1	76.6	73.3	79.0	83.9	76.2	82.1	87.2
10/300	38.8	41.8	44.5	47.1	50.7	53.9	54.6	58.8	62.5	61.7	66.4	70.6	67.5	72.7	77.3	70.2	75.6	80.3
10/200	44.5	47.9	50.9	53.9	58.0	61.7	62.5	67.3	71.6	70.6	76.0	80.8	77.3	83.3	88.5	80.3	86.5	91.9
10/150	48.9	52.7	56.0	59.3	63.9	67.9	68.8	74.1	78.8	77.7	83.7	88.9	85.1	91.6	97.4	88.4	95.2	101.2
12/300	-	-	-	53.1	57.2	60.8	61.7	66.4	70.6	69.6	75.0	79.7	76.2	82.1	87.3	79.2	85.4	90.7
12/200	-	-	-	60.8	65.5	69.6	70.6	76.0	80.8	79.7	85.9	91.3	87.3	94.0	99.9	90.7	97.7	103.8
12/150	-	-	-	67.0	72.1	76.6	77.7	83.7	88.9	87.7	94.5	100.4	96.1	103.5	110.0	99.8	107.5	114.3

ARBOX® J

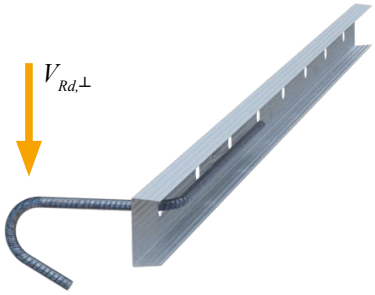

ARBOX® L

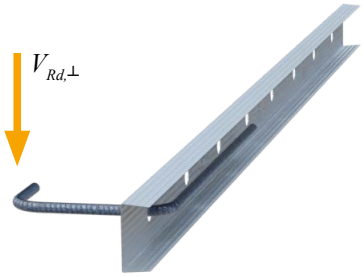

ARBOX® I

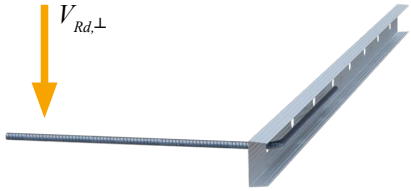

Table 8. Shear load resistance transverse to the concrete joint of ARBOX® Plus L, ARBOX® Plus J and ARBOX® Plus I.

Shear resistance $V_{Rd,\perp}$ [kN/m]									
diameter/spacing [mm/mm]	d [mm]								
	46.5			55			63.5		
	C20/25	C25/30	C30/37	C20/25	C25/30	C30/37	C20/25	C25/30	C30/37
8/300	21.6	23.2	24.7	-	-	-	-	-	-
8/150	27.2	29.3	31.1	-	-	-	-	-	-
10/300	-	-	-	28.0	30.1	32.0	-	-	-
10/150	-	-	-	35.2	38.0	40.3	-	-	-
12/300	-	-	-	-	-	-	34.8	37.5	39.8
12/150	-	-	-	-	-	-	43.8	47.2	50.1

2.3.2 Shear resistance of ARBOX® Plus transverse to the concrete joint with shear reinforcement of the slab

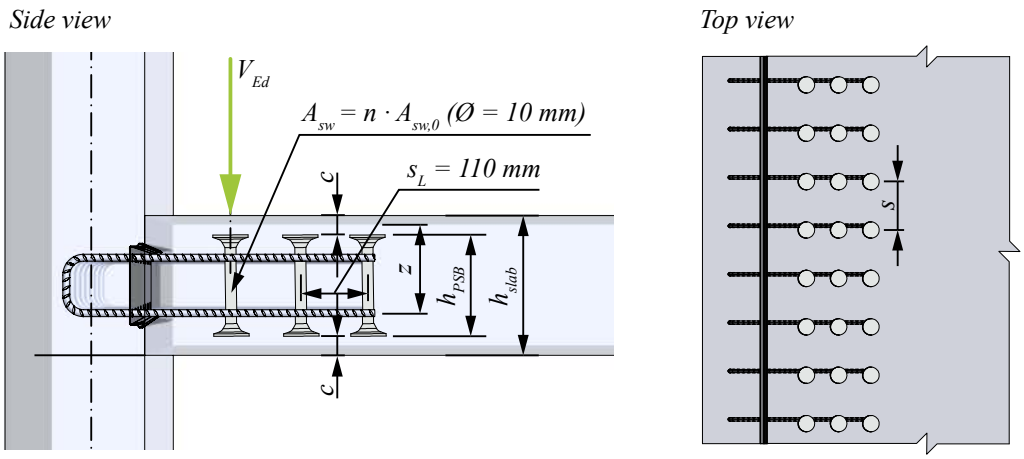

Figure 14. Force acting transverse to joint.

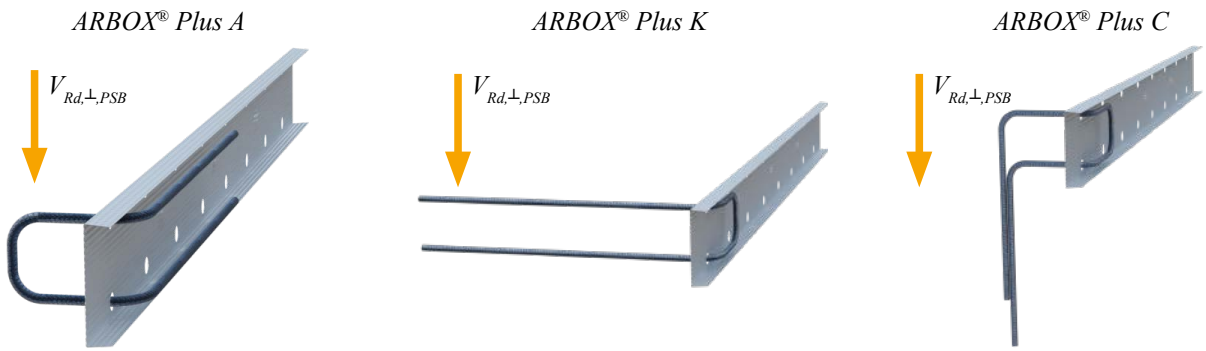

Table 9. Shear load resistance transverse to the concrete joint of ARBOX® Plus A, ARBOX® Plus K and ARBOX® Plus C, with PSB® headed studs reinforcement according to Figure 14.

Shear resistance with PSB® shear reinforcement $V_{Rd,\perp,PSB}$ [kN/m]												
diameter/spacing [mm/mm]	z											
	135			162			189			207		
	C20/25	C25/30	C30/37	C20/25	C25/30	C30/37	C20/25	C25/30	C30/37	C20/25	C25/30	C30/37
8/300		166.5			199.8			233.1			255.3	
8/200	177.3	221.6	249.7	212.7	265.9	299.7	248.2	310.2	349.6	271.8	339.8	382.9
8/150		221.6	265.9		265.9	319.1		310.2	372.3		339.8	407.7
10/300		166.5			199.8			233.1			255.3	
10/200	177.3	221.6	249.7	212.7	265.9	299.7	248.2	310.2	349.6	271.8	339.8	382.9
10/150		221.6	265.9		221.6	265.9		221.6	265.9		221.6	265.9
12/300		166.5			199.8			233.1			255.3	
12/200	177.3	221.6	249.7	212.7	265.9	299.7	248.2	310.2	349.6	271.8	339.8	382.9
12/150		221.6	265.9		265.9	319.1		310.2	372.3		339.8	407.7

Resistances in *Table 9.* are defined based on Chapter 2.1.2 for one row of PSB® diameter 10 mm in 1 m wide slab. Spacing "s" is defined based on ARBOX® reinforcement layout (150, 200 or 300 mm). Spacing along ARBOX® reinforcement is s_L = 110 mm.

If PSB® headed studs are utilized with varying layouts or diameters, or if there is a difference in the effective height, it is necessary to use installation guidelines provided in the PSB® Headed Anchors Technical Manual, or contact Peikko Technical Support.

2.4 Bending resistance of the concrete joint of ARBOX® Plus

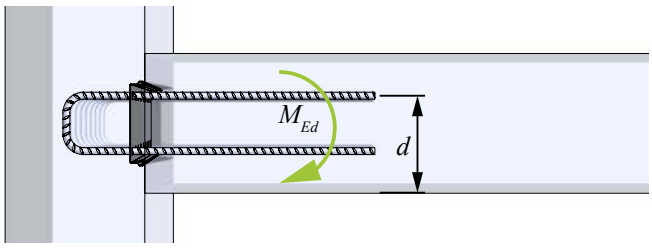

Figure 15. Bending moment acting to the joint.

Table 10. Bending resistance of the concrete joint (minimum concrete grade C20/25)

Bending resistance M_{Rd} [kNm/m]						
20/25	d [mm]					
diameter/spacing [mm/mm]	**90**	**120**	**150**	**180**	**210**	**230**
8/300	5.1	6.9	8.6	10.4	12.1	13.3
8/200	7.6	10.2	12.8	15.4	18.1	19.8
8/150	10.0	13.5	17.0	20.5	24.0	26.3
10/300	7.9	10.6	13.3	16.1	18.8	20.6
10/200	11.6	15.7	19.8	23.9	28.0	30.7
10/150	15.1	20.6	26.1	31.5	37.0	40.6
12/300	-	15.1	19.0	23.0	26.9	29.5
12/200	-	22.2	28.1	34.0	39.9	43.8
12/150	-	28.9	36.8	44.6	52.5	57.7

2.5 Load transfer and verifications of ARBOX® Strong according to EN 1992-1-1

2.5.1 Shear resistance in longitudinal direction to the concrete joint

Shear load resistance longitudinal to the concrete joint:

$$V_{Rd,||} = c \times f_{ctd} + \rho \times f_{yd,red} \times (\mu \times sin\alpha) \qquad V_{Ed} \leq V_{Rd,||}$$

Where:

c = 0.5 - parameter (indented surface)
μ = 0.7
f_{ctd} = design value of concrete tensile strength
ρ = reinforcement ratio
$f_{yd,red}$ = design yield strength of the reinforcement reduced to 80 % due to rebending actions

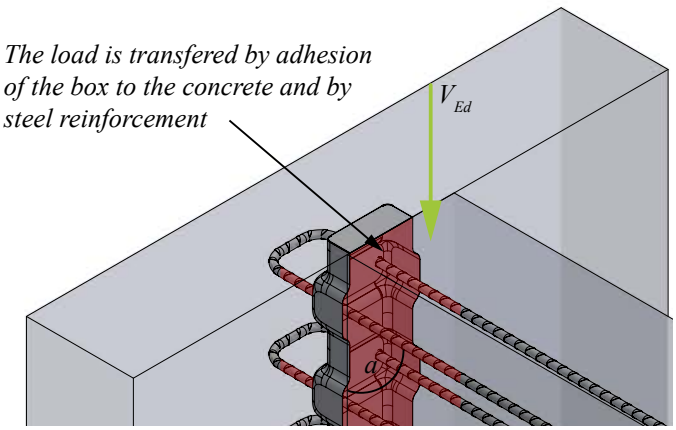

It is recommended to use the ARBOX® Plus model for transverse shear loading of the connection. In the case of using the ARBOX® Strong model for transfer of transverse shear, contact Peikko Technical Support.

Bending moment resistance shall be calculated as defined in Chapter 2.1.3.

The reinforcement shall be anchored in the concrete according to EN 1992-1-1, 8.3 (3).

2.6 Shear load resistance of ARBOX® Strong longitudinal to the concrete joint

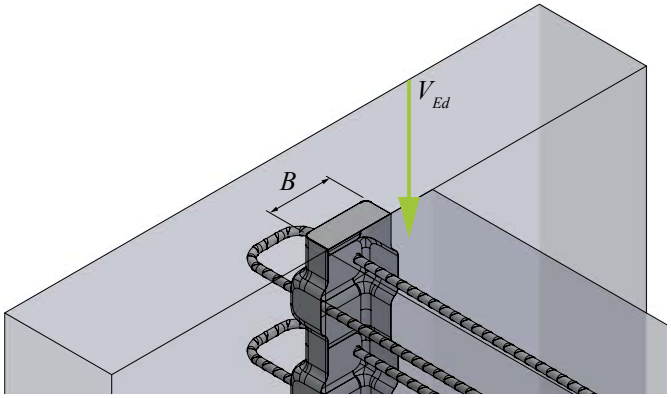

Figure 16. Force acting longitudinal to joint.

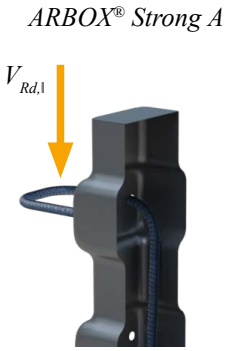

Table 11. Shear load resistance longitudinal to the concrete joint of ARBOX® Strong A.

	Shear resistance $V_{Rd,l}$ [kN/m]											
diameter/spacing [mm/mm]	Box width B [mm]											
	115			145			175			215		
	C20/25	C25/30	C30/37	C20/25	C25/30	C30/37	C20/25	C25/30	C30/37	C20/25	C25/30	C30/37
8/300	162.4	173.9	181.6	177.4	191.9	201.6	192.4	209.9	221.6	212.4	233.9	248.2
8/150	267.3	278.8	286.5	282.3	296.8	306.5	297.3	314.8	326.5	317.3	338.8	353.1
10/300	221.4	232.9	240.6	236.4	250.9	260.6	251.4	268.9	280.6	271.4	292.9	307.2
10/150	385.3	396.8	404.5	400.3	414.8	424.5	415.3	432.8	444.5	435.3	456.8	471.2
12/300	272.0	283.5	291.2	287.0	301.5	311.2	302.0	319.5	331.2	322.0	343.5	357.9
12/150	423.2	498.0	505.7	501.5	516.0	525.7	516.5	534.0	545.7	536.5	558.0	572.4

Selecting ARBOX® Joint Reinforcement

The following aspects must be considered when selecting the appropriate type of ARBOX® Joint Reinforcement to be used in wall reinforcement:

- Direction of loading – longitudinal/transverse to joint
- Dimensions of the concrete wall
- Reinforcement spacing
- Steel profile diameter
- Concrete class.

Considering all aspects above and based on the properties and dimensions of the joint. ARBOX® Plus model A is the most suitable for this construction.

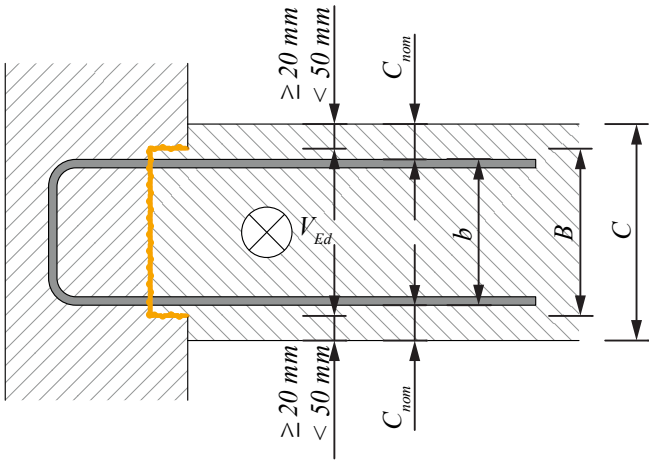

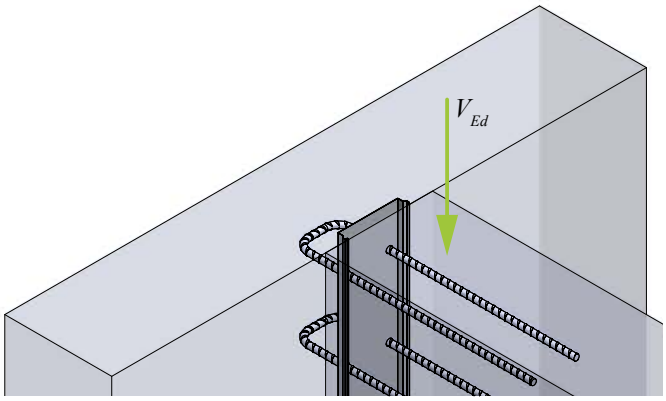

Input data:

Design load, longitudinal to construction joint	V_{Ed} = 186.3 kN/m
Width of the wall	C = 200 mm
Reinforcement spacing	s = 200 mm
Concrete class	C25/30
Minimal cover	c_{nom} = 30 mm

Selection process:

Rebar width $b \leq C - 2c_{nom}$ = 140 mm

b = 120 mm < 140 mm ⇨ B = 145 mm

SELECTING

Type X = A, K or C	Diameter d_s [mm]	Rebar spacing s [mm]	Box width B [mm]	Rebar width b [mm]	Box height H [mm]	Lap length l_o [mm]	Hook length h [mm]	Anchorage length l_{bd} [mm]	Component thickness C [mm]
ARBOX® Plus X- 8-150-85	8	150	85	60	36	330	134	220	≥ 125
ARBOX® Plus X- 8-200-85	8	200	85	60	36	330	134	220	≥ 125
ARBOX® Plus X- 8-300-85	8	300	85	60	36	330	134	220	≥ 125
ARBOX® Plus X- 8-150-115	8	150	115	90	36	330	134	220	≥ 155
ARBOX® Plus X- 8-200-115	8	200	115	90	36	330	134	220	≥ 155
ARBOX® Plus X- 8-300-115	8	300	115	90	36	330	134	220	≥ 155
ARBOX® Plus X- 8-150-145	8	150	145	120	36	330	134	220	≥ 185
ARBOX® Plus X- 8-200-145	8	200	145	120	36	330	134	220	≥ 185
ARBOX® Plus X- 8-300-145	8	300	145	120	36	330	134	220	≥ 185
ARBOX® Plus X- 8-150-175	8	150	175	150	36	330	134	220	≥ 215
ARBOX® Plus X- 8-200-175	8	200	175	150	36	330	134	220	≥ 215
ARBOX® Plus X- 8-300-175	8	300	175	150	36	330	134	220	≥ 215
ARBOX® Plus X- 8-150-205	8	150	205	180	36	330	134	220	≥ 245
ARBOX® Plus X- 8-200-205	8	200	205	180	36	330	134	220	≥ 245
ARBOX® Plus X- 8-300-205	8	300	205	180	36	330	134	220	≥ 245
ARBOX® Plus X- 8-150-225	8	150	225	200	36	330	134	220	≥ 265
ARBOX® Plus X- 8-200-225	8	200	225	200	36	330	134	220	≥ 265
ARBOX® Plus X- 8-300-225	8	300	225	200	36	330	134	220	≥ 265

diameter/spacing [mm/mm]	Shear resistance $V_{Rd,\parallel}$ [kN/m]																	
	Box width B [mm]																	
	85			115			145			175			205			225		
	C20/25	C25/30	C30/37	C20/25	C25/30	C30/37	C20/25	C25/30	C30/37	C20/25	C25/30	C30/37	C20/25	C25/30	C30/37	C20/25	C25/30	C30/37
8/300	115.6	122.4	126.9	127.6	136.8	142.9	139.6	151.2	158.9	151.6	165.6	174.9	163.6	180.0	190.9	171.6	189.6	201.6
8/200	156.4	163.2	167.7	168.4	177.6	183.7	180.4	192.0	199.7	192.4	206.4	215.7	204.4	220.8	231.7	212.4	230.4	242.4
8/150	197.2	204.0	208.5	209.2	218.4	224.5	221.2	232.8	240.5	233.2	247.2	256.5	245.2	261.6	272.5	253.2	271.2	283.2
10/300	161.5	168.3	172.8	173.5	182.7	188.8	185.5	197.1	204.8	197.5	211.5	220.8	209.5	225.9	236.8	217.5	235.5	247.5
10/200	225.2	232.0	236.6	237.2	246.4	252.6	249.2	260.8	268.6	261.2	275.2	284.6	273.2	289.6	300.6	281.2	299.2	311.2
10/150	289.0	295.8	300.3	301.0	310.2	316.3	313.0	324.6	332.3	325.0	339.0	348.3	337.0	353.4	364.3	345.0	363.0	375.0
12/300	-	-	-	212.8	222.0	228.2	224.8	236.4	244.2	236.8	250.8	260.2	248.8	265.2	276.2	256.8	274.8	286.8
12/200	-	-	-	296.3	305.5	311.6	308.3	319.9	327.6	320.3	334.3	343.6	332.3	348.7	359.6	340.3	358.3	370.3
12/150	-	-	-	379.7	388.9	395.0	391.7	403.3	411.0	403.7	417.7	427.0	415.7	432.1	443.0	423.7	441.7	453.7

Max. design load

$V_{Rd,\parallel}$ = 192.0 kN/m

$V_{Ed} \leq V_{Rd,\parallel}$

186.3 kN/m < 192.0 kN/m

Selected product:

ARBOX® Plus A-8-200-145

Rough surface
ARBOX® model
Rebar diameter
Rebar spacing
Box width

Note 1: For model C add dimension l_l at the end of product code, e.g. ARBOX® Plus C-10-200-205 l_l = 200.
Note 2: If there is need for product with customized lengths, please contact Peikko Customer Engineering.

ANNEX A — ARBOX® Joint Reinforcement with MODIX® Rebar Coupler

It is possible to use ARBOX® Plus together with MODIX® Rebar coupler and take benefits from both systems:

- No reduction of connection resistances due to re-bending of rebar
- Possible many rebar shape options including anchor head (see MODIX® Technical Manual)
- MODIX® Rebar coupler with shear resistance

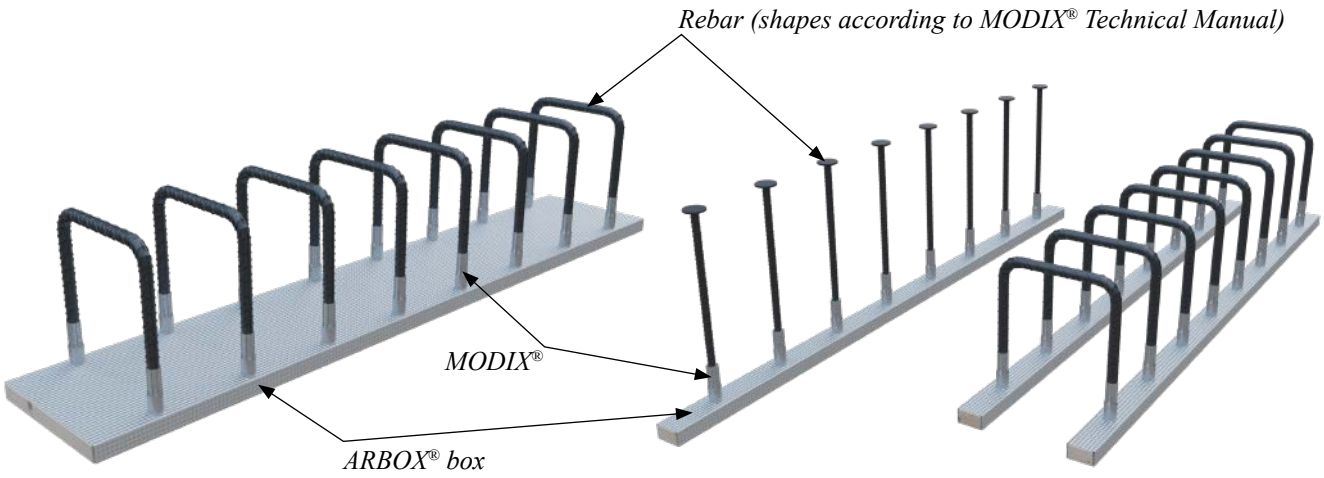

How to order ARBOX® Joint Reinforcement with MODIX® Rebar coupler

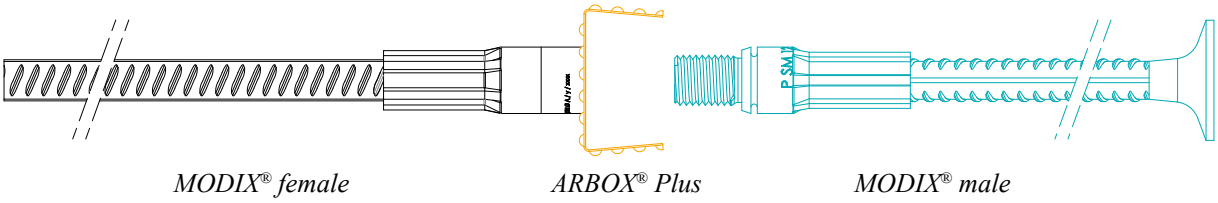

BOX part
Assembly part

Description of MODIX® female part attached to ARBOX® Plus (see MODIX® Technical Manual)

ARBOX® Plus dimensions

Rebar part
Separate item

Description of MODIX® male part (see MODIX® Technical Manual)

SM16A-P-500 + ARBOX® Plus-150-205 + SM16B-L-300

Rebar spacing
Box width

- Respect box dimensions from *Table 1* to *Table 3* of this technical manual.
- Shape of rebars can be produce based on *Table 3* of MODIX® Technical manual.
- Respect minimum dimension of bent reinforcement bar from *Table 5* of MODIX® Technical Manual.

Shear resistances of ARBOX® with MODIX® models can be calculated with full capacity of rebar which is 500MPa.

Installing ARBOX® Joint Reinforcement

Before casting, fix the ARBOX® Joint Reinforcement in the planned position by nailing it onto the wooden formwork or connecting it to the existing reinforcement.

Pour concrete into the formwork.
When the formwork is removed the ARBOX® Plus steel cover is revealed.

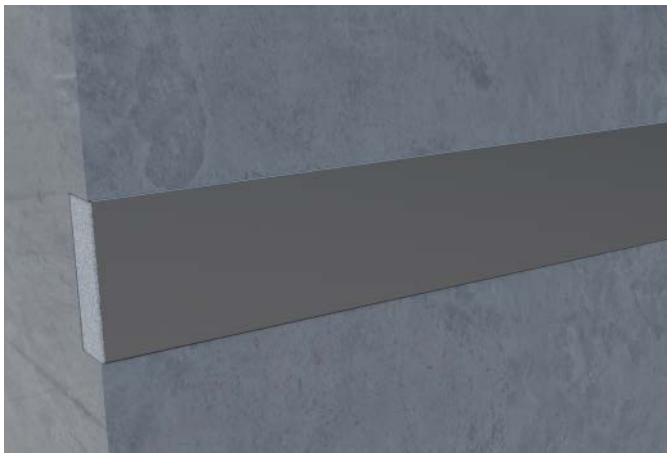

Remove the ARBOX® Plus steel cover by cutting the tapes that secure it. Then place the claw of a hammer at one end and pull it away to expose the pre-bent bars.

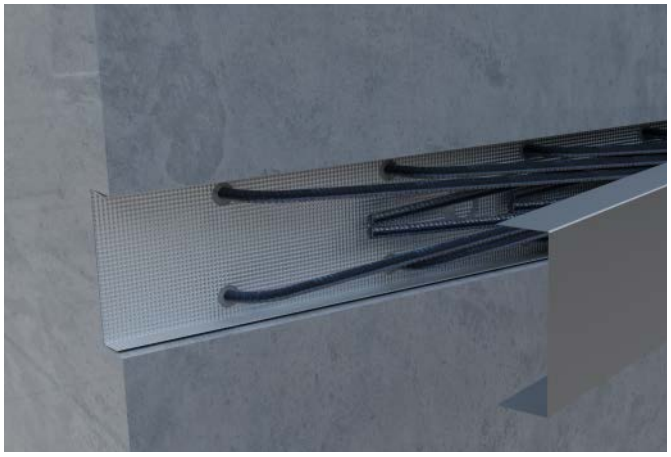

Straighten the bars using an appropriate re-bending tool (e.g. pipe with internal diameter not greater than 2× nominal bar diameter). **Bars must only be straightened once.**

In case of models ARBOX® Plus K and C it is necessary to remove the polystyrene block. For straightening of rebar loops can be used re-bending tool.

Re-bending tool can be delivered as a special offer. Contact local Peikko unit for more information.

Remove concrete debris. Once the bars are straightened and aligned. They are ready for overlapping with the element reinforcement. Overlapping length is length l_0.

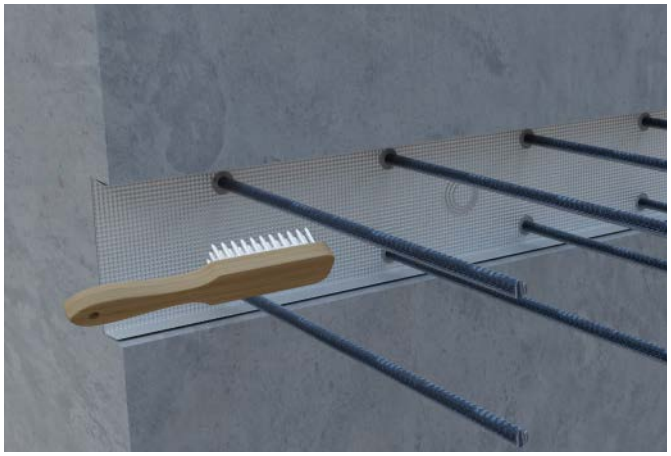

The offset of the rebar after straightening shall be maximum 3×d.

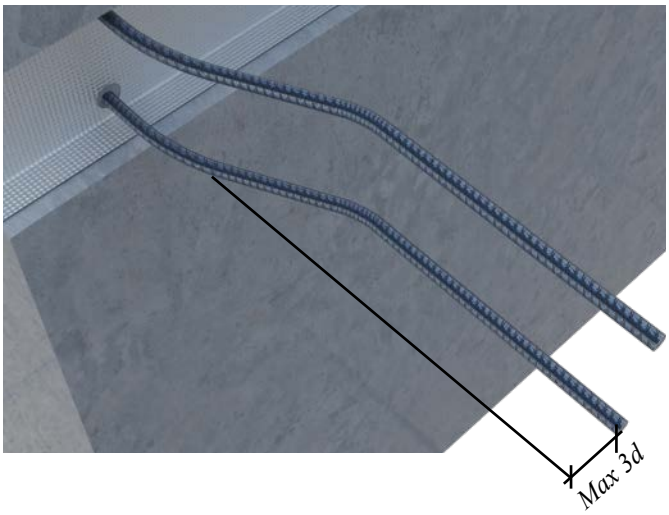

Installation with MODIX® Rebar Coupler

Before casting fix the ARBOX® Joint Reinforcement in the planned position by nailing it onto the wooden formwork or connecting it to the existing reinforcement.

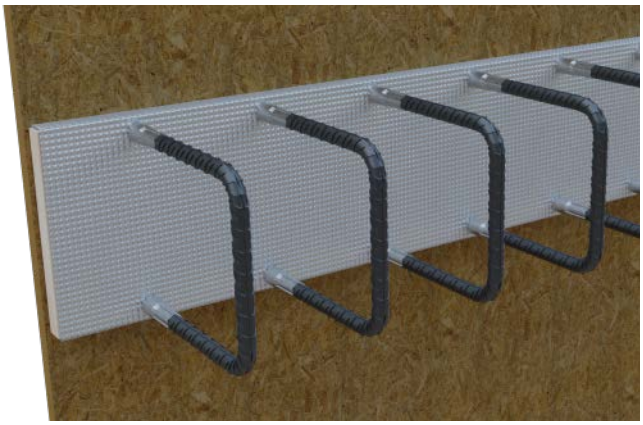

Pour concrete into the formwork.
When the formwork is removed the ARBOX® Plus steel cover is revealed.

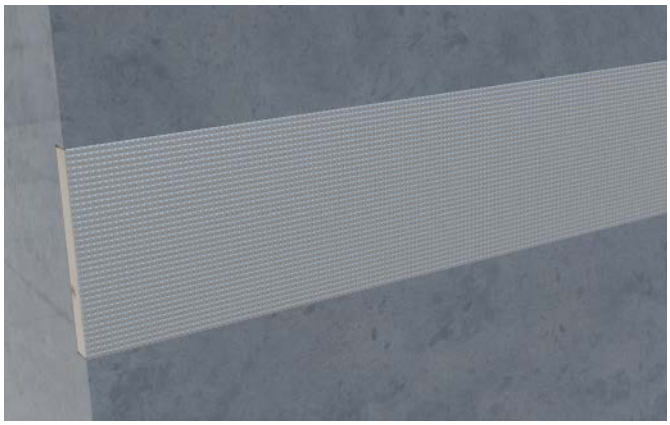

Remove the ARBOX® Plus steel cover by cutting the tapes that secure it, then place the claw of a hammer at one end and pull it away. Remove bolts inside of the steel box by wrench.

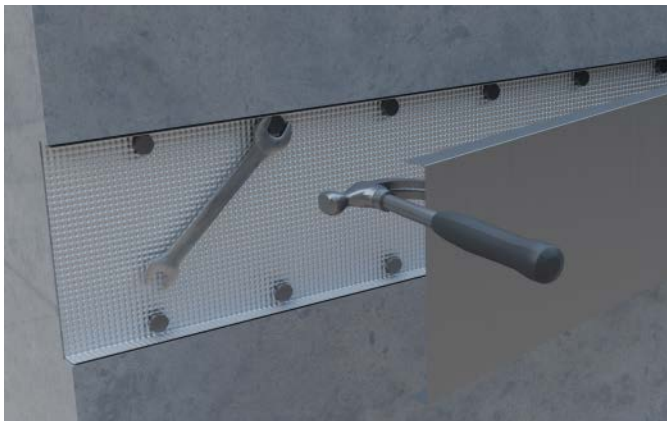

Remove concrete debris and clean interior of the box.

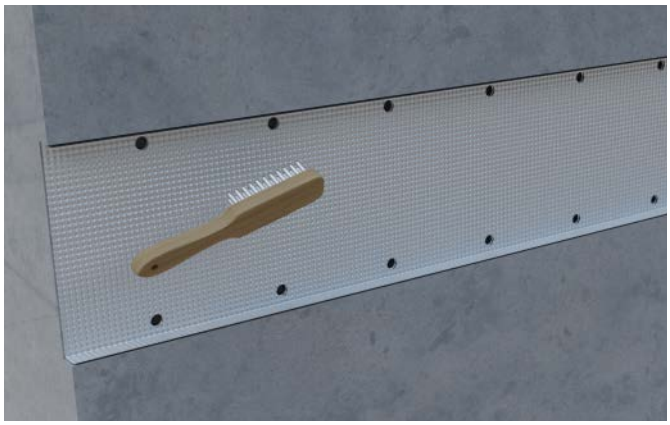

Install the male part of the MODIX® Rebar couplers. MODIX® Rebar couplers are tightened when ring at male part is closed. Rebars are then ready for overlapping with the element's reinforcement. Overlapping length is length l_0.

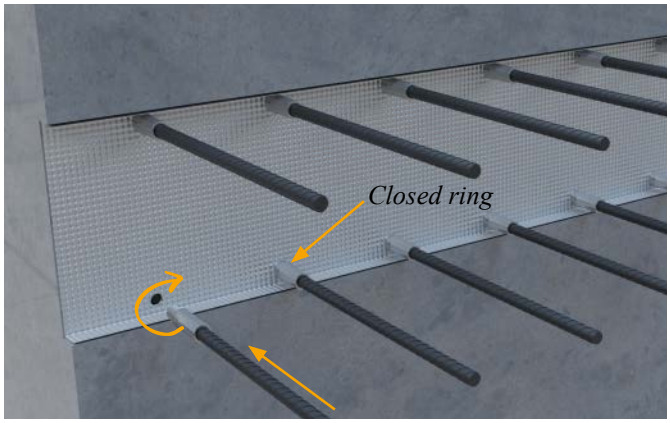

Revisions

Version: PEIKKO GROUP 01/2024. Revision: 006

- Removal of ARBOX® model, implementation of ETA certificate for ARBOX® Plus, shear resistances with PSB® Headed Anchors, and information about installation tool

Version: PEIKKO GROUP 04/2022. Revision: 005

- Updates to Tables 1, 2, 3, 4 and references to tables for ordering clarity.

Version: PEIKKO GROUP 05/2021. Revision: 004

- Product portfolio extended.
- Includes ARBOX®, ARBOX® Plus, ARBOX® Strong models.

Version: PEIKKO GROUP 10/2020. Revision: 003

- Internal use only. Not intended for public use.
- Includes ARBOX® Plus and ARBOX® Strong models.

Version: PEIKKO GROUP 01/2019. Revision: 002

- Product portfolio extended.
- Branding updated to 2018.

Version: PEIKKO GROUP 04/2018. Revision: 001*

- New cover design for 2018 added.

Resources

DESIGN TOOLS

Use our powerful software every day to make your work faster, easier, and more reliable. Peikko design tools include design software, 3D components for modeling programs, installation instructions, technical manuals, and product approvals of Peikko's products.

peikko.com/design-tools

TECHNICAL SUPPORT

Our technical support teams around the world are available to assist you with all of your questions regarding design, installation etc.

peikko.com/technical-support

APPROVALS

Approvals, certificates, and documents related to CE-marking (DoP, DoC) can be found on our websites under each products' product page.

peikko.com/products

EPDS AND MANAGEMENT SYSTEM CERTIFICATES

Environmental Product Declarations and management system certificates can be found at the quality section of our websites.

peikko.com/qehs

COMPANY WITH
MANAGEMENT SYSTEM
CERTIFIED BY DNV
ISO 9001 • ISO 14001
ISO 45001