TECHNICAL MANUAL

KAPU® Safety Railing Sleeve

For installing temporary edge protection systems

Version PEIKKO GROUP 04/2020

peikko®

KAPU® Safety Railing Sleeve

For installing temporary edge protection systems

KAPU® Safety Railing Sleeves are used for the quick and safe installation of temporary guardrails on load-bearing and non-load-bearing concrete walls. KAPU® Safety Railing Sleeves are installed in wall elements at the precast factory and are ready for use immediately after the wall element is installed in place.

KAPU® Safety Railing Sleeves consist of a steel tube and the anchors welded to it. These anchors transfer the loads on the rail to the concrete. KAPU® Safety Railing Sleeves come equipped with stud anchors offering four different anchoring options, which enables easy installation between the element reinforcement.
KAPU® Safety Railing Sleeves offer effortless and fast guardrail installation on site with pre-installed Railing Sleeves on the wall elements.

The standard KAPU® are compatible with the most common guardrail posts and have been tested in accordance with the EN 13374 standard for temporary loads on guardrails in protection classes A and B. KAPU® Safety Railing Sleeves can also be used to install permanent structural components under a static load.

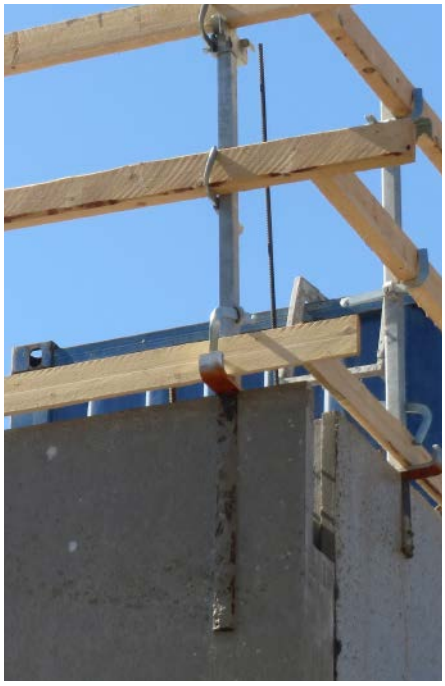

peikko®

www.peikko.com

CONTENTS

KAPU® Safety Railing Sleeve properties

1. Product properties

KAPU® Safety Railing Sleeves are used for the installation of temporary guardrails on load-bearing and non-load-bearing concrete walls. KAPU® Safety Railing Sleeves consist of a steel tube and the anchors welded to it. These anchors transfer the loads on the rail to the concrete.

The standard KAPU® Safety Railing Sleeve models have been tested in accordance with the EN 13374 standard for temporary loads in protection classes A and B. The requirements for these classes are included in Appendix B (page 20). KAPU® Safety Railing Sleeves can also be used to install permanent structural components under static loads. The selection includes a variety of different Railing Sleeve models that can be used for different applications.

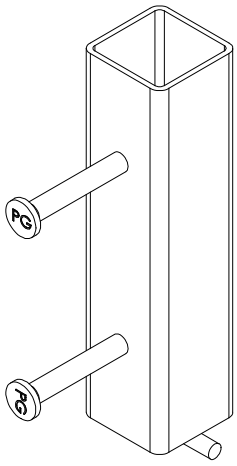

KAPU®-202

The KAPU®-202 comes with two stud anchors, which make it suitable for structures where guardrail tubes are directly attached to the outer surface of the inner shell element.

Suitable for protection class A without additional reinforcement and protection class B with additional reinforcement.

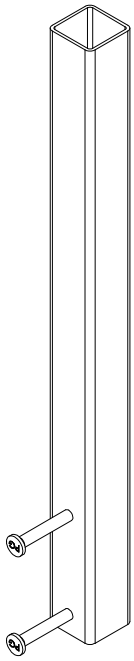

KAPU®-602

The KAPU®-602 with two stud anchors. For applications where the rail installation point needs to be raised above the Structure Service Level.

Suitable for protection class A without additional reinforcement and protection class B with additional reinforcement.

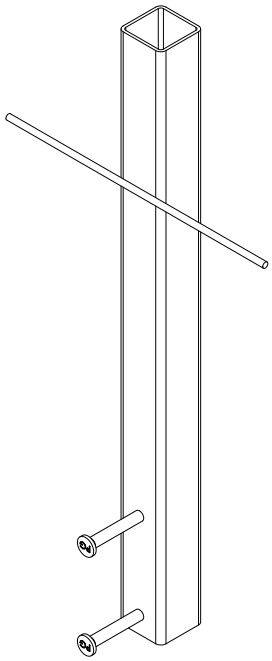

KAPU®-602+

The KAPU®-602+ comes with two stud anchors and a transverse rebar. Used for elements where the crossbar is anchored to or behind the casting block.

Suitable for protection classes A and B without additional reinforcement.

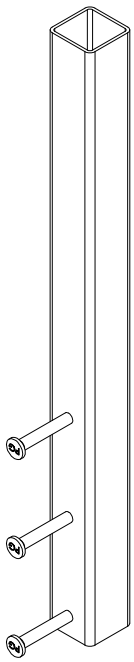

KAPU®-403... KAPU®-803

The KAPU®-403...KAPU®-803 come with three stud anchors for higher loads. For applications where the rail installation point needs to be raised above the Structure Service Level. Standard lengths 400 mm, 500 mm, 600 mm, 700 mm, and 800 mm. The appropriate length is determined according to slab depth.

Suitable for protection classes A and B without additional reinforcement.

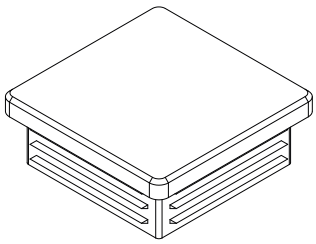

PROTECTIVE CAP

KAPU® Safety Railing Sleeves are available with polyethylene protective caps to prevent concrete from flowing into the sleeve during the casting process and to ensure successful installation of the guardrail.

The protective caps can also be used to cover the openings at the end of the rails and to prevent debris, rainwater, snow and ice from accumulating in KAPU® Safety Railing Sleeves during element storage and installation.

Longer KAPU® models are most often used in load-bearing wall elements. The stud anchors are placed lower in the thicker part of the wall, and the Railing Sleeve is raised higher; for example, to the level of the upper surface of the vault. The Railing Sleeves are either mounted on the element's outer surface or embedded in the element to the cross-section's depth.

Figure 1. KAPU® Safety Railing Sleeves in wall elements.

KAPU® Safety Railing Sleeves are installed in the molds at the precast factory, either mounted onto the outer surface of the element or embedded to the cross -section's depth. In a sandwich element, the Railing Sleeve can also be installed in the insulation space by anchoring it on the shell's inner surface with stud anchors.

Figure 2. Installation on an external surface.

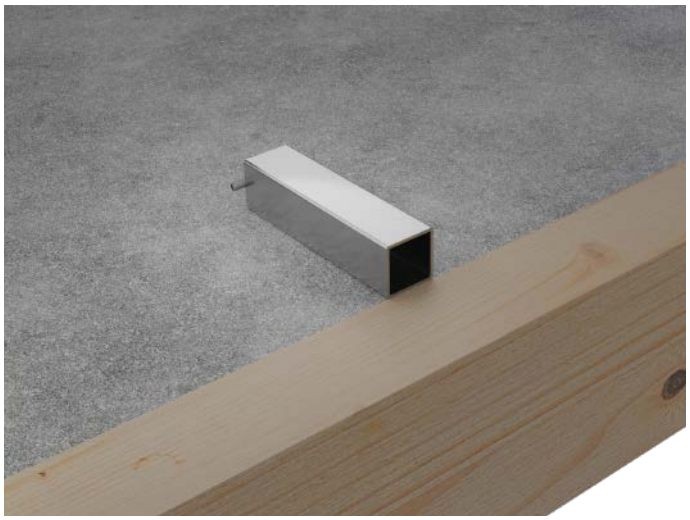

Figure 3. Installation in a sandwich element.

1.1 Structural behavior

Horizontal loads on rails cause horizontal force and bending moment on the attachment element. KAPU® Safety Railing Sleeves transfer the loads on the railing to the concrete using stud anchors and a possible transverse anchor rod.

Figure 4. KAPU® Safety Railing Sleeve design principles.

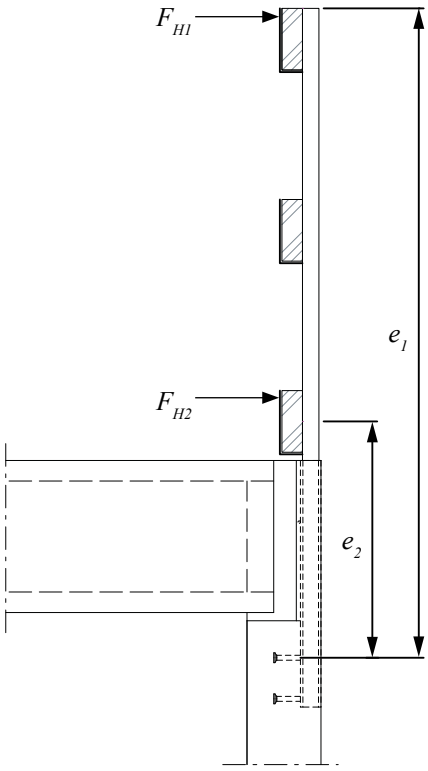

1.2 Conditions during use

KAPU® Safety Railing Sleeves are designed for use in the conditions described in this section. If the specified environmental conditions cannot be met, please contact the Peikko Technical Support to find a solution.

1.2.1 Load and environmental conditions

KAPU® Safety Railing Sleeves can be used for attaching temporary guardrails in accordance with the EN 13374 standard's protection classes A and B as specified in the instructions below. KAPU® Safety Railing Sleeves can also be used to install permanent structural components under a static load, such as attachments to removable guardrails in transport openings or attachments to element rail systems.

KAPU® Safety Railing Sleeves are available uncoated or hot dip galvanized. The uncoated model is suitable for dry interiors or environments where potential corrosion of the rail does not cause harm or where parts are removed as the element installation proceeds. The hot-dip galvanized model is suited for use up to corrosivity category C3.

For long-term use, the surface treatment needs to meet the requirements of the applicable environmental conditions. The placement of the railing sleeve shall comply with the concrete cover requirement as per EN 1992-1-1.

1.2.2 Placement of KAPU® Safety Railing Sleeves

When choosing the locations of KAPU® Safety Railing Sleeves, the minimum requirements presented in *Table 1* must be taken into account. The minimum concrete structure thickness h_{min} and the topmost stud anchor's minimum edge distance c_{min} from the element top surface need to be met in the part to which the stud anchor is attached, as shown in the *Figure 5*.

Table 1. Placement of KAPU® Safety Railing Sleeves.

Example	Minimum thickness of concrete structure h_{min} [mm]	Minimum distance from edge c_{min} [mm]	Minimum distance from edge of concrete structure c [mm]	Minimum c/c distance a [mm]	Edge reinforcements at least
KAPU®-202	100	50	300	600	2 × d8
KAPU®-602 KAPU®-602+ KAPU®-403 KAPU®-503 KAPU®-603 KAPU®-703 KAPU®-803	100	75	300	600	2 × d8

Note 1. KAPU® Safety Railing Sleeves can also be embedded in concrete elements, provided that the minimum structural dimensions are met.

Note 2. If the minimum edge and center distances are not met, additional reinforcement is required for the anchors. For more assistance, please contact Peikko technical support.

Figure 5. Placement of KAPU® Safety Railing Sleeves and minimum element dimensions.

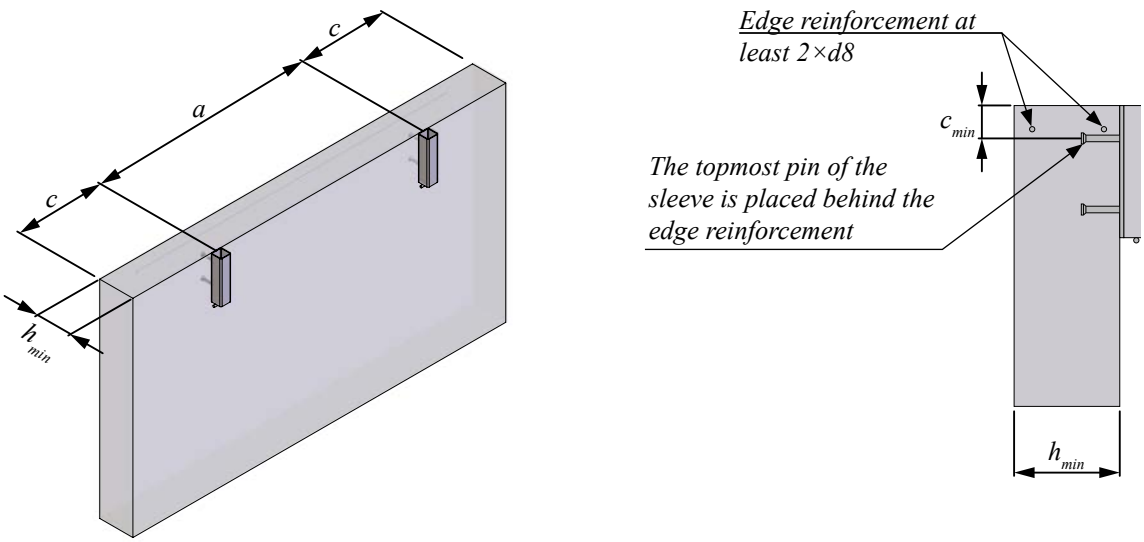

1.3 Other properties

KAPU® Safety Railing Sleeves consist of a structural tube, stud anchors, and possible reinforced concrete bars. The material properties and dimensions of KAPU® Safety Railing Sleeves are presented in tables *Table 2* and *Table 3*.

Table 2. Materials.

Part	Material	Standard
Structural tube	S355	EN 10219-1
Stud anchors	SD1	EN ISO 13918
Reinforcement steel	B500B	EN 10080

Peikko Group's production units are subject to external quality control and are periodically audited by various independent inspection bodies in accordance with production and product approvals.

All KAPU® Safety Railing Sleeves have the following markings: the manufacturer's name, the product type designation, the date of manufacture (year and week of manufacture) or the Rec.ID identifier containing the date of manufacture, and the protection class according to EN 13374.

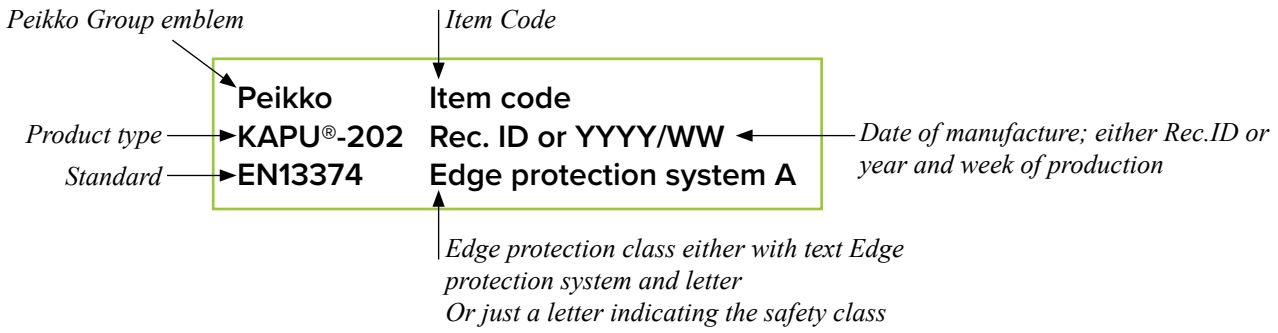

Figure 6. KAPU®-202 dimensions.

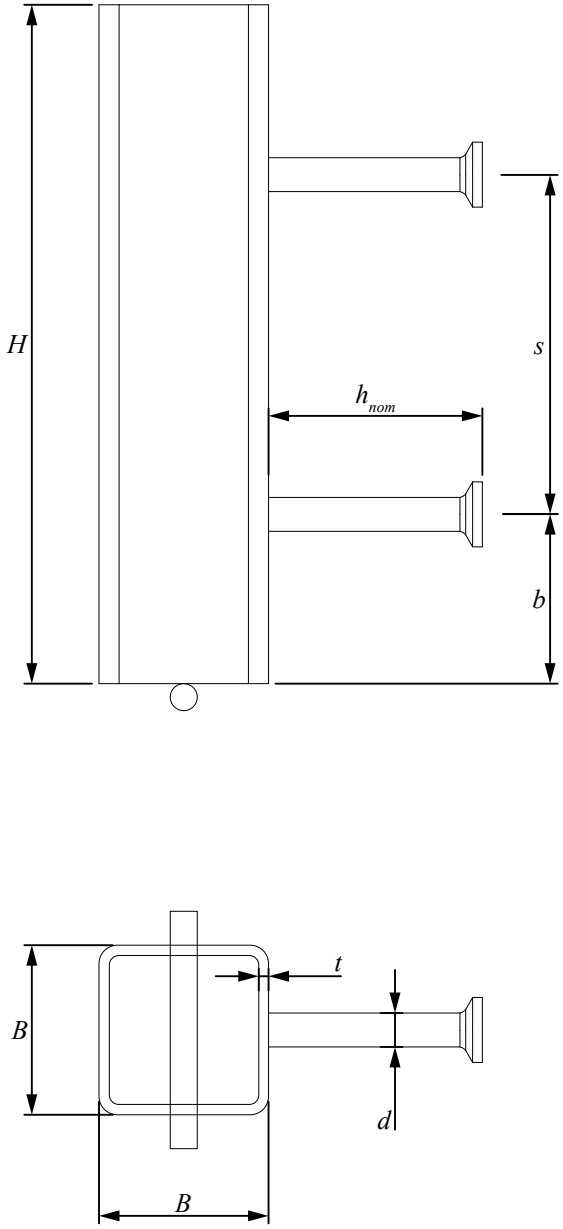

Figure 7. KAPU®-602 dimensions.

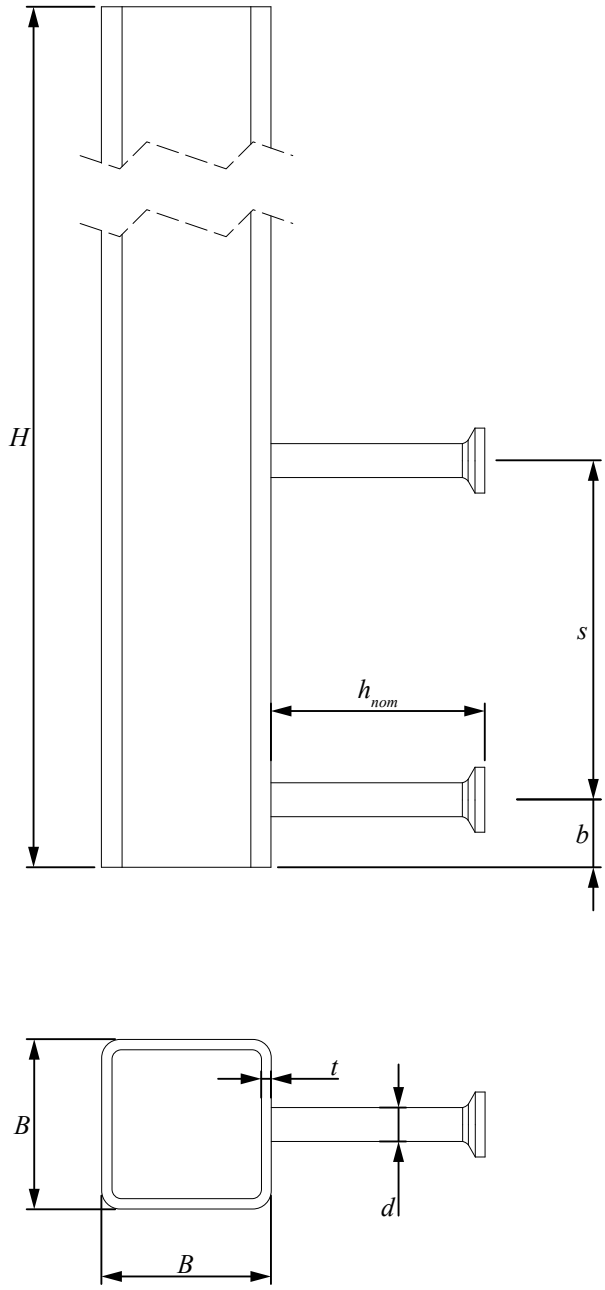

Figure 8. KAPU®-602+ dimensions.

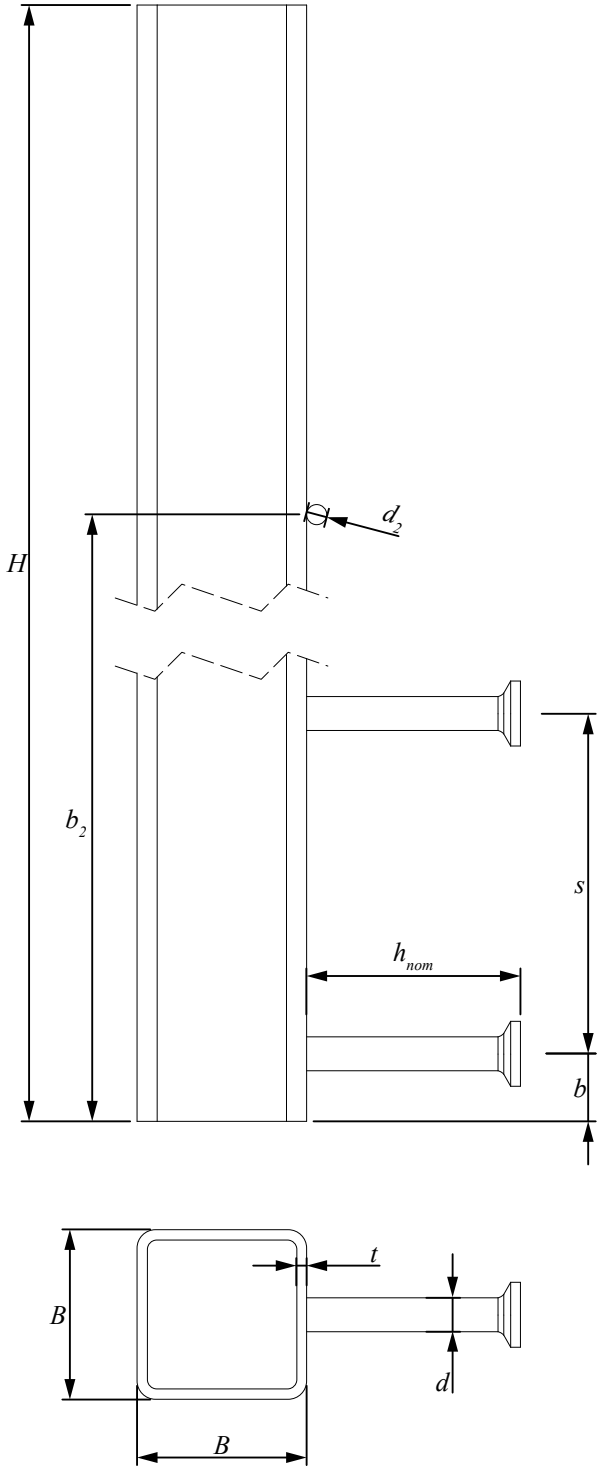

Figure 9. KAPU®-403...KAPU®-803 dimensions.

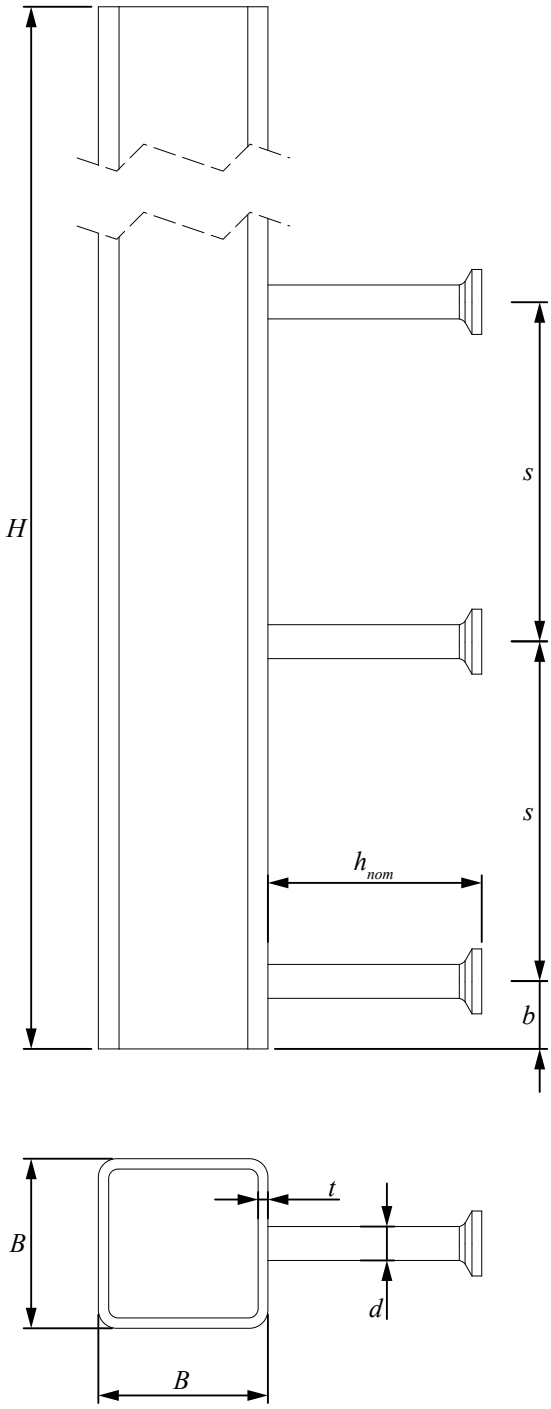

Table 3. Dimensions and weights.

Type	B [mm]	H [mm]	t [mm]	h_{nom} [mm]	s [mm]	b [mm]	d [mm]	Stud anchors [pcs]	Weight [kg]
KAPU®-202	50	200	3	63	100	50	10	2	1.0
KAPU®-602	50	600	3	63	100	20	10	2	2.7
KAPU®-602+	50	600	3	63	100	20	10	2	2.8
KAPU®-403	50	400	3	63	100	20	10	3	1.9
KAPU®-503	50	500	3	63	100	20	10	3	2.3
KAPU®-603	50	600	3	63	100	20	10	3	2.7
KAPU®-703	50	700	3	63	100	20	10	3	3.2
KAPU®-803	50	800	3	63	100	20	10	3	3.6

Note 1: For KAPU® 602+: Transverse rebar length l_1 = 300 mm, diameter d_2 = 6 mm and distance from the underside of the structural tube b_2 = 450 mm

Note 2: Railing Sleeves can also be made to order with special dimensions. For more information, please contact Peikko technical support.

Product code overview

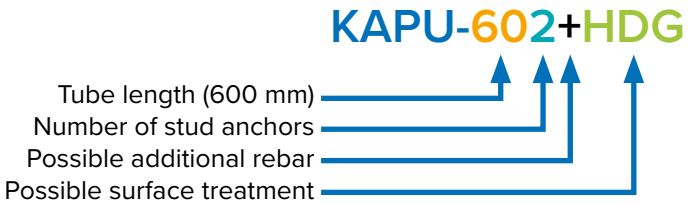

2. Resistances

KAPU® resistances to static loads are determined by the number of anchors and the strength of the concrete. The resistances are determined according to the following standards:

- EN 1992-4
- EN 1992-1-1
- EN 1993-1-1
- EN 1993-1-8.

2.1 Resistance to temporary loads

Temporary loads on guardrails are defined in EN 13374, which covers temporary edge protection systems and their testing. The standard defines the protection classes according to the demands and the intended use.
All KAPU® Safety Railing Sleeves can be used without additional reinforcement in protection class A, provided that the working surface to be protected has a maximum inclination angle of 10°.

KAPU®-202 and KAPU®-602 can be used in protection class B with additional reinforcement in accordance with the additional reinforcement guidelines in Appendix A. KAPU®-602+ and KAPU®-403 ... KAPU®-803 can also be used without additional reinforcement in protection class B. In protection class B, the inclination angle of the working surface may not exceed 30°. The minimum structural dimensions presented earlier in the section “Conditions during use” must be observed when positioning the railing sleeve.

The design of horizontal supports for railing posts or railing systems is not covered by this system. Standard EN 13374 section 6, Structural Design, specifies the design loads to be used for temporary guardrails.

Note: The concrete must have a minimum compressive strength of 20 MPa.

2.2 Resistance to static loads

The resistance to static loads is determined based on the adhesion of the anchors and the strength class of the concrete. The resistances are specified without additional reinforcement. In order to ensure a resilient failure mechanism, the structure must have the edge reinforcement presented in the installation section of this document. Placement must be in accordance with the minimum structural dimensions presented above. To achieve the presented resistances, the concrete must have a strength class of at least C20/25. The part's structural function in the concrete is shown in *Figure 10*.

Figure 10. Structural model.

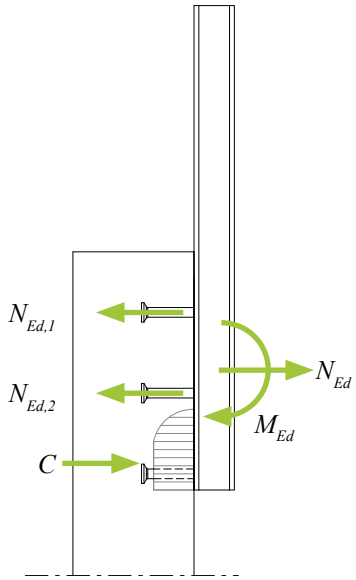

The capacity diagrams of KAPU® Safety Railing Sleeves are presented in figures *Figure 11*, *Figure 12* and *Figure 13*. The diagrams are defined for concrete strength class C20/25 and for the concrete partial safety factor γ_c = 1.5 in accordance with EN 1992-1-1.

Figure 11. KAPU®-202 capacity diagram.

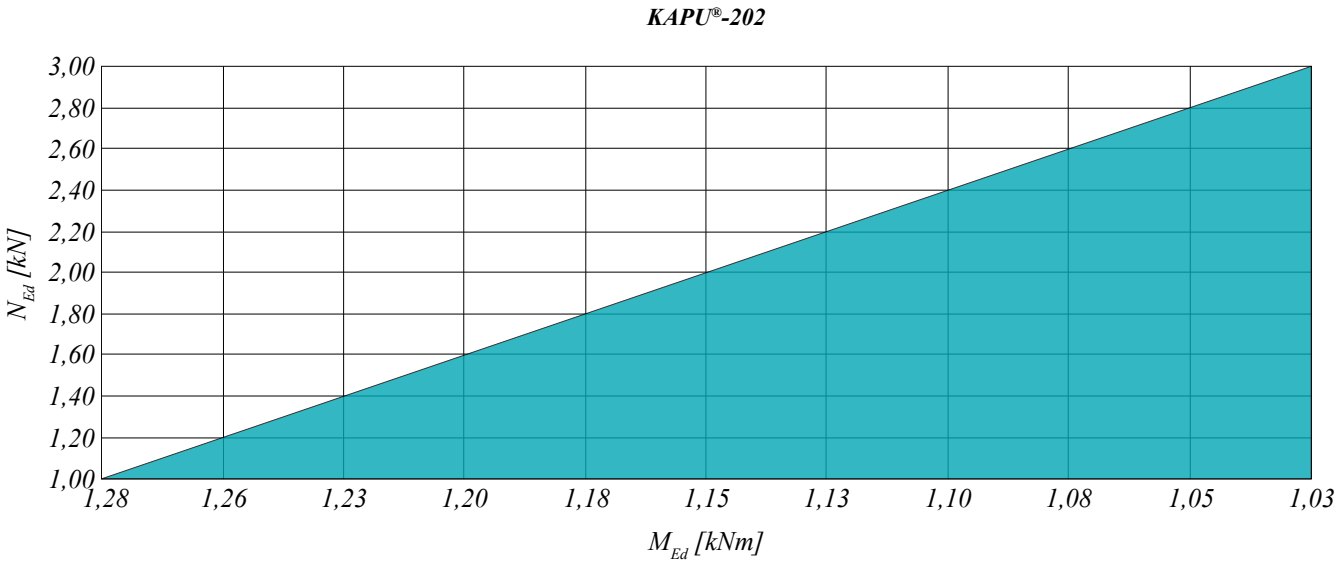

Figure 12. KAPU®-602 capacity diagram.

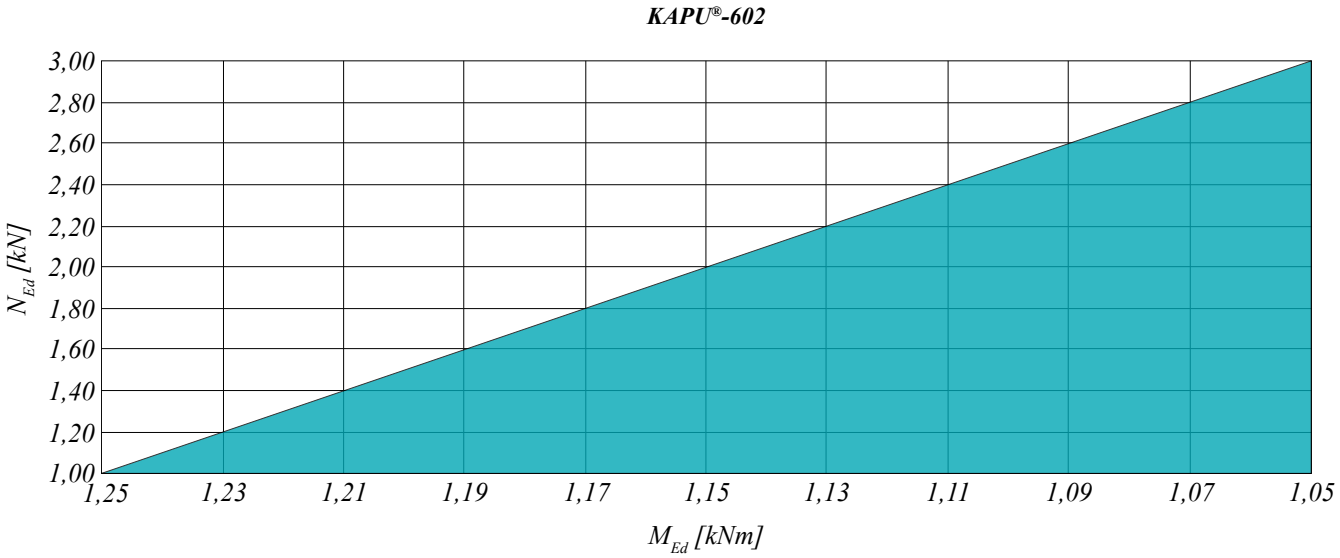

Figure 13. KAPU®-603 capacity diagram.

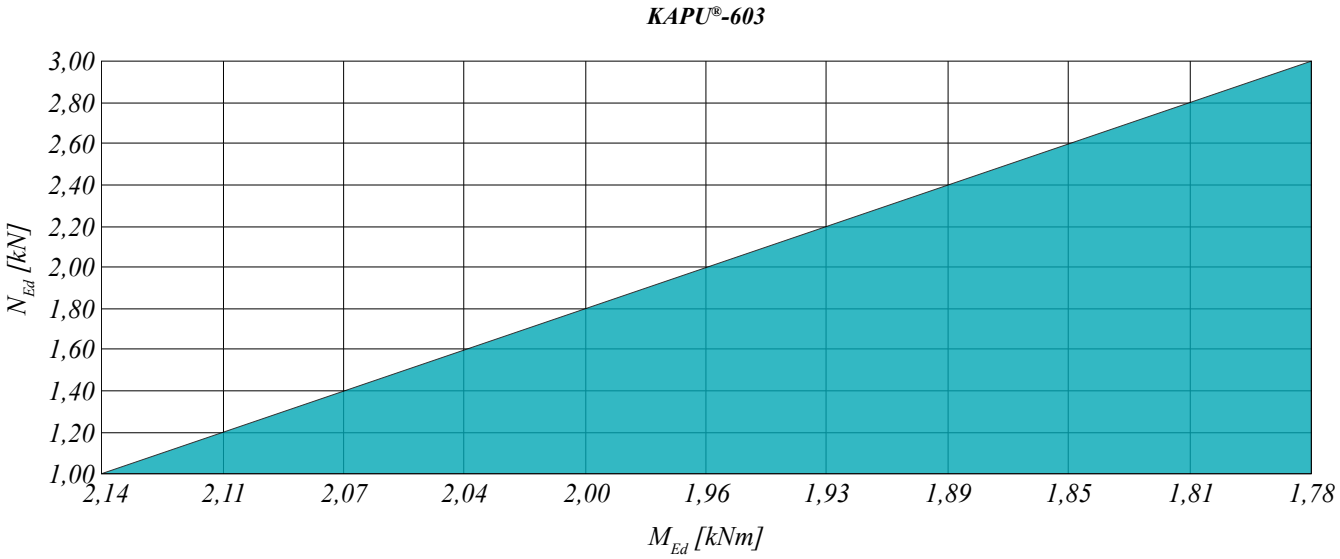

Selecting KAPU® Safety Railing Sleeves

In order to determine which KAPU® model is best suited to the application, the following points should be considered:

- attachment type: temporary/permanent
- dimensions of concrete wall and/or slab
- strength class of concrete
- loads
- protection class (for temporary guardrail attachment).

For permanent loads in long-term use, dimensioning is done in accordance with the Eurocode for static loads. The loads on temporary guardrails are presented in the guardrail standard.

Example 1: Load on temporary guardrail

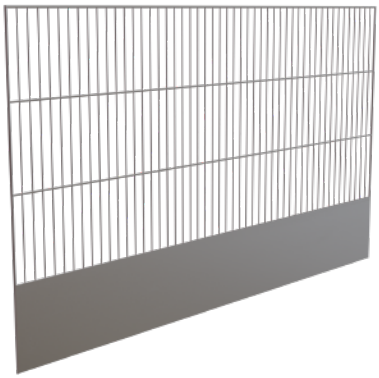

The calculation of ultimate limit loads of a guardrail system in accordance with EN 13374.

In the example calculation, the railing is assumed to be a steel railing with mesh, as in the adjacent figure. The $A_{railing}$ net area potentially exposed to wind has been calculated for the railing, as has the location of the area center point y measured from the railing's bottom edge. The working surface is assumed to have 0 degrees (no inclination). The height of the guardrail is 1150 mm above the working surface.

$A_{railing}$ = 0.71 m² y = 302 mm $h_{railing}$ = 1150 mm

Load combination 1 (maximum wind)

Wind pressure:
q = 600 N/m² (EN 13374, *Table 2*)

Surface form factor:
c_f = 2 (EN 13374, section 6.3.4 or EN 1991-1-4)

Load partial safety factor:
γ_F = 1.5 (EN 13374, *Table 2*)

Resultant force of wind load:

$$Q_{MW} = 2 \times \frac{600\ N}{m^2} \times 0.71\ m^2 = 852\ N$$

$$Q_{MW} = c_f \times q \times A_{railing}$$

(EN 13374, section 6.3.4)

Load moment arm (KAPU-202):
e = 200 mm - 50 mm - 100 mm + 302 mm = 352 mm

$$e = H - b - s + y$$

(*Table 3* and figure below)

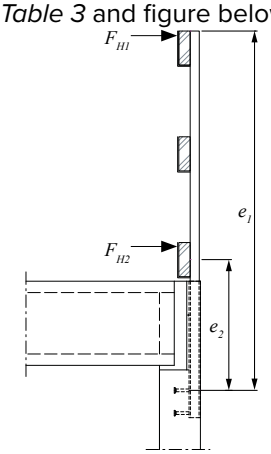

Design values of bending moment and normal force:
$M_{Ed,MW}$ = 1.5 × 852 N × 352 mm = **0.449 kNm**
$N_{Ed,MW}$ = 1.5 × 852 N = **1.278 kN**

$$M_{Ed,MW} = \gamma_F \times Q_{MW} \times e$$
$$N_{Ed,MW} = \gamma_F \times Q_{MW}$$

Compare the design values to the KAPU-202 capacity diagram (*Figure 11*). The capacity is sufficient.

Load combination 2 (wind and point load)

Wind pressure:
q = 200 N/m^2 (EN 13374, *Table 2*)

Surface form factor:
c_f = 2 (EN 13374, section 6.3.4 or EN 1991-1-4)

Load partial safety factor:
γ_F = 1.5 (EN 13374, *Table 2*)

Resultant force of wind load:

$$Q_{WW} = 2 \times \frac{200\ N}{m^2} \times 0.71\ m^2 = 284\ N$$

$$Q_{WW} = c_f \times q \times A_{railing}$$ (EN 13374, section 6.3.4)

Point load:
F_{H1} = 300 N (EN 13374, *Table 2*)

Wind load moment arm (KAPU-202):
e_2 = 200 mm - 50 mm - 100 mm + 302 mm = 352 mm $e_2 = H - b - s + y$ (*Table 3* and the figure below)

Point load moment arm (KAPU-202):
e_1 = 200 mm - 50 mm - 100 mm + 1150 mm = 1200 mm $e_1 = H - b - s + h_{railing}$ (*Table 3* and the figure below)

Design values of bending moment and normal force:
$M_{Ed,WW+H1}$ = 1.5 × (284 N × 352 mm + 300 N × 1200 mm) = **0,69 kNm** $M_{Ed,WW+H1} = \gamma_F \times (Q_{WW} \times e_2 + F_{H1} \times e_1)$
$N_{Ed,WW+H1}$ = 1.5 × (284 N + 300 N) = **0,876 kN** $N_{Ed,WW+H1} = \gamma_F \times (Q_{WW} + F_{H1})$

Compare the design values to the KAPU-202 capacity diagram (*Figure 11*). The capacity is sufficient.

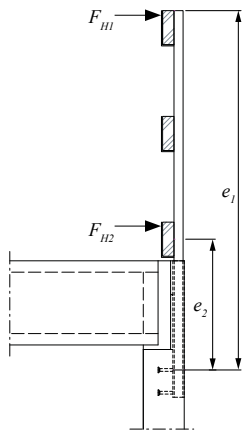

Example 2: Load on permanent guardrail

KAPU® Safety Railing Sleeves can also be used for attaching permanent railings, for example around transport openings in production spaces. The load on a permanent guardrail is determined according to standard EN 1991-1-1. The size of the horizontal load is selected according to the intended use of the space.

In the sample calculation, the space is assumed to be in category E. The rail height $h_{railing}$ is 1.2 m from the surface of the working surface and the spacing between rail posts k is 0.8 m. The building is presumed to be in consequence category CC2.

$h_{railing}$ = 1200 mm k = 800 mm K_{fi} = 1.0 (see EN 1990)

Payload partial safety factor:
γ_Q = 1.5 (EN 1990)

Railing load:
q_k = 1 kN/m (EN 1991-1-1)

Design value of railing load:

$$F_d = 1.5 \times 1.0 \times \frac{1\ kN}{m} \times 0.8\ m = 1.2\ kN$$

$$F_d = \gamma_Q \times K_{fi} \times q_k \times k$$

Railing load moment arm (KAPU-603):
e = 600 mm - 20 mm - 2 × 100 mm + 1200 mm
= 1580 mm

$e = H - b - (n_s - 1) \times s + y$ (*Table 3* and the figure below)
Where n_s = Number of stud anchors.

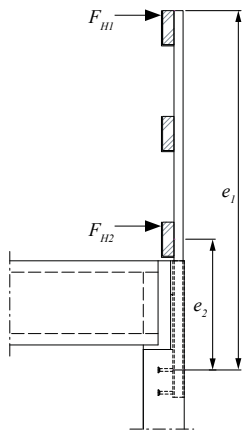

Design values of bending moment and normal force:
M_{Ed} = 1.35 kN × 1.58 m = **1.9 kNm**
N_{Ed} = F_d = **1.2 kN**

Compare the design values to the KAPU-603 capacity diagram (*Figure 13*). The capacity is sufficient.

Appendix A – Additional Reinforcement

For protection class B, KAPU®-202 and KAPU®-602 need additional reinforcement in accordance with the instructions provided here. The additional reinforcement ensures the concrete's resistance to dynamic loads. KAPU® Safety Railing Sleeve anchors must also be reinforced when minimum edge and center distances are not met. For more assistance, please contact Peikko Technical Support.

Figure 14. Additional reinforcement.

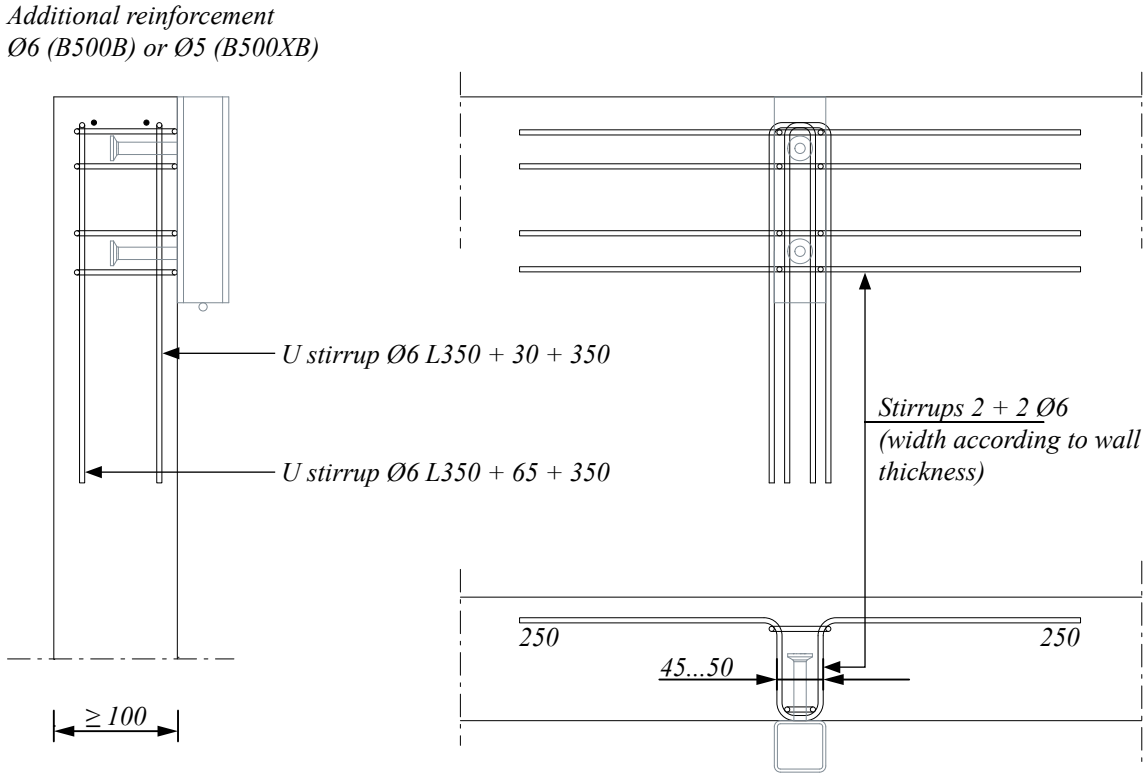

Appendix B – Safe Use and Inspection of the Product

Safety

To ensure safety, the limitations presented in this Technical Manual must be taken into account when KAPU® Safety Railing Sleeves are used for installing temporary guardrails. In addition, it is important to adhere to the local specifications in the occupational safety and health regulations on the safe use and inspection of work equipment.

KAPU® Safety Railing Sleeves comply with the classification of temporary guardrail systems according to standard EN 13374 (*Figure 15*):

- Class A can be used if the working surface has less than 10 degrees of inclination angle and the loads are static. This class requires that the rail protects people from falling when they lean onto the railing or that it provides them with something to grab onto while walking next to it, and generally acts as a barrier that stops people who walk into or fall onto the railing (KAPU® with two stud anchors).
- Class B is suitable for static or low dynamic loads with a working surface inclination angle of less than 30° (60° allowed at working heights less than 2 m). Class B has the same requirements as Class A, with the additional requirement of being able to stop a person who is slipping or falling along an inclined surface (KAPU® with three stud anchors or KAPU® with two stud anchors and additional reinforcement).

Figure 15. Classification of EN 13374 guardrails according to height of fall and inclination angle of working surface.

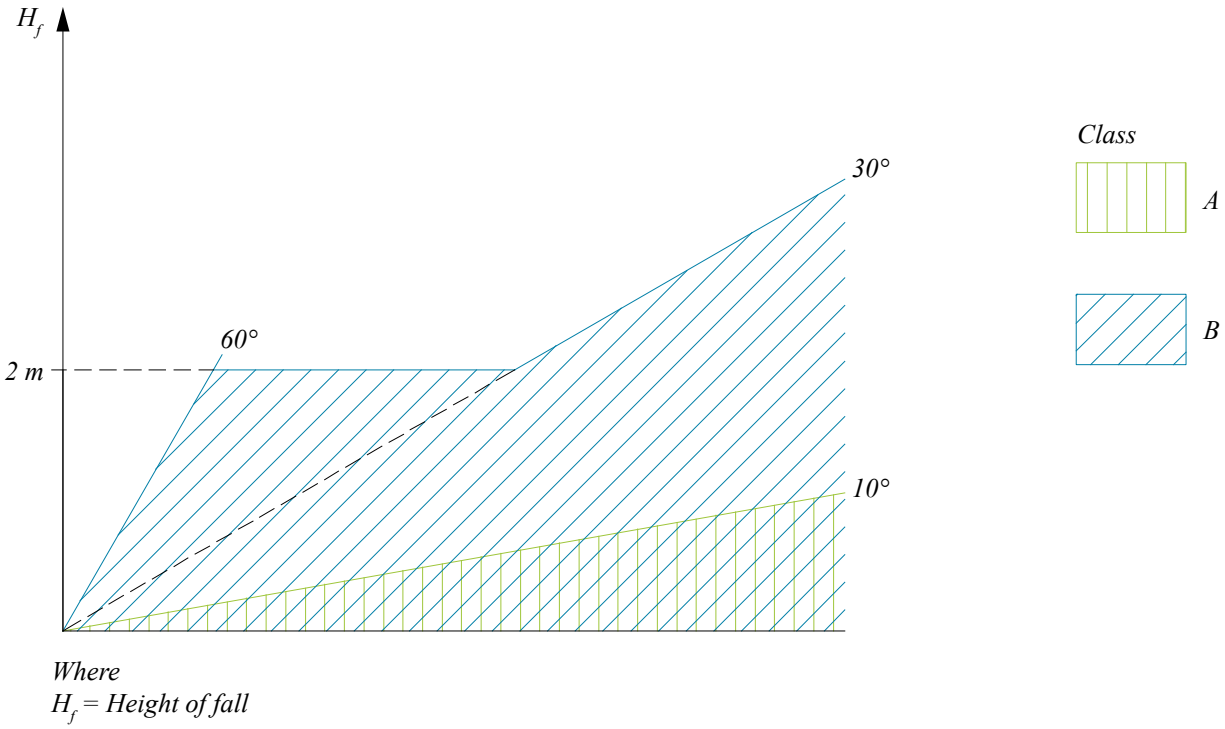

If a person or object falls onto the guardrail, the guardrail and its parts must be inspected by a qualified person for potential damage inflicted by the load. The distance between the edge barrier and other structures should be kept to a minimum; up to 120 mm for guardrails and 20 mm for toeboards.

Environmental conditions

The lifecycle of KAPU® Safety Railing Sleeves begins at product storage and ends at the installation of elements and railing structures at the construction site. The time from product storage to installation can be hours, days, weeks or even months. Weather variations, chemicals and marine climates can cause corrosion and weaken unprotected products. Protect products against corrosion during storage, transport and installation.

Weather conditions and effects should always be taken into consideration when using the products on site, as, strong winds, snow and ice may affect the safety.

Notes concerning product modification

Peikko cannot control the conditions or the work done at the precast factory or the construction site. Therefore, Peikko cannot guarantee the safety of any Peikko product if this is modified in any way to deviate from the factory version. For example, when welding a product. Additionally, the product's stud anchors should not be bent or cut off.

Inspection

The product needs to be inspected by a qualified person before installation and use. The inspection shall include the following, as a minimum:

- Inspect the product and its parts for cracks, fractures, deflections, extra holes, or bumps.
- Inspect the product for corrosion.

Do not attempt to repair damaged KAPU® Safety Railing Sleeves. Do not use a product that is damaged in any way.

Installation of KAPU® Safety Railing Sleeves

Installation at the element factory

Product identification

KAPU® Safety Railing Sleeves are available in four standard designs: KAPU®-202, KAPU®-602, KAPU®-602+, and KAPU®-403...KAPU®-803. The railing sleeve model and protection class can be identified by the marking on the product.

Installation in the element

KAPU® Safety Railing Sleeves are installed in the mold before the concrete is cast. The exact locations of the railing sleeves are indicated in the structural designs. The railing sleeves are either mounted on the element's outer surface or embedded in the element to the tube's depth (figures *Figure 16* and *Figure 17*). Railing Sleeves can also be installed in the insulation space of a sandwich element in which case the stud anchors are anchored to the element's inner shell (*Figure 18*).

Figure 16. KAPU® mounted on the outer surface of an element.

Figure 17. KAPU® embedded in the element.

Figure 18. KAPU® installation in a sandwich element.

The installation of the required additional reinforcement should be performed in accordance with Appendix A of the Technical Manual. The product's stud anchors should not be bent or cut off in any case.

The installation tolerance for the Railing Sleeve positioning is ±10 mm vertically and ±20 mm laterally. Care must be taken during casting to ensure that the Railing Sleeve position does not shift and that post-casting tolerances can be achieved.

Figure 19. Assembly tolerances.

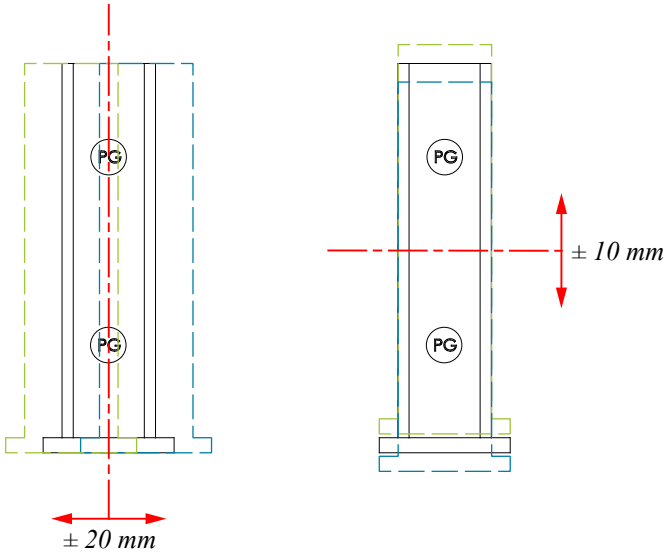

KAPU® Safety Railing Sleeves are available with polyethylene protective plugs to prevent concrete from flowing into the rail during the casting process. The protective caps can also be used to cover the openings at the end of the rails and to prevent debris, rainwater, snow and ice from accumulating in KAPU® Safety Railing Sleeves during element storage and installation.

Figure 20. Protective cap.

Installation on site

The selected railings are installed in accordance with the rail system supplier's guidelines and applicable standards. Note that the security rating for the entire railing is determined by the lowest rated section.

Figure 21. An example of a railing system built using KAPU® Safety Railing Sleeves.

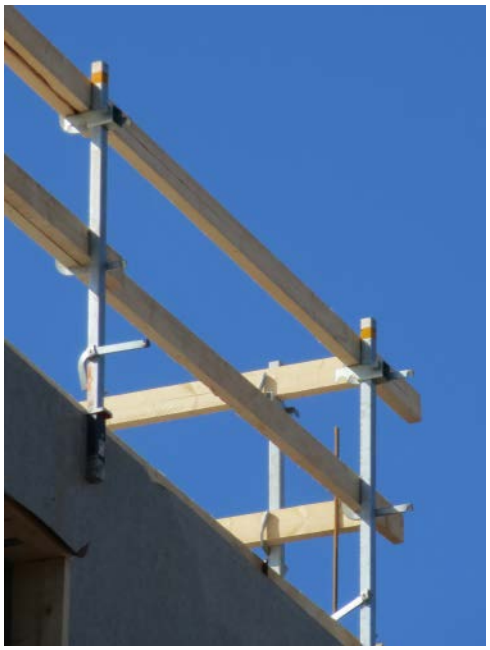

The Railing Sleeve can be cut if it is not required anymore. Alternatively, the Railing Sleeve can be left in the structure, in which case we recommend filling the sleeve with rock wool or concrete.

NOTES

NOTES

Revisions

Version: PEIKKO GROUP 04/2020. Revision: 001

- First publication.

Resources

DESIGN TOOLS

Use our powerful software every day to make your work faster, easier, and more reliable. Peikko design tools include design software, 3D components for modeling programs, installation instructions, technical manuals, and product approvals of Peikko's products.

peikko.com/design-tools

TECHNICAL SUPPORT

Our technical support teams around the world are available to assist you with all of your questions regarding design, installation etc.

peikko.com/technical-support

APPROVALS

Approvals, certificates, and documents related to CE-marking (DoP, DoC) can be found on our websites under each products' product page.

peikko.com/products

EPDS AND MANAGEMENT SYSTEM CERTIFICATES

Environmental Product Declarations and management system certificates can be found at the quality section of our websites.

peikko.com/qehs

COMPANY WITH
MANAGEMENT SYSTEM
CERTIFIED BY DNV
ISO 9001 • ISO 14001
ISO 45001