TECHNICAL MANUAL

TERAJOINT® Free Movement Joint

Robust Free Movement Joint System

Version: APAC 10/2022

peikko®

TERAJOINT® Free Movement Joints

Robust Free Movement Joint Systems

- Prefabricated leave-in-place free movement joint system with a variety of fixed load transfer mechanisms to suit various floor loadings.
- Excellent performance with 40 mm × 10 mm cold drawn steel for strong armoring of joint arrises.
- Suitable for the high flatness category floor and superflat floor construction.
- Fast track installation with a selection of fixing methods and accessories.
- All materials used in this product are 100% recyclable.

TERAJOINT® is the industry standard in the range of prefabricated heavy-duty movement joint systems, suitable for all large-area construction methods for ground-bearing and pile-supported concrete floors. The cold-drawn steel top strips provide durable protection to the slab arrises, making it ideal for floors in a heavy-duty traffic environment.

The system ensures reliable load transfer in formed free movement joints with openings of up to 30 mm wide and is suitable for slab depths from 100 mm to 300 mm. Custom-made items for application in slabs over 300 mm thick can be produced upon request.

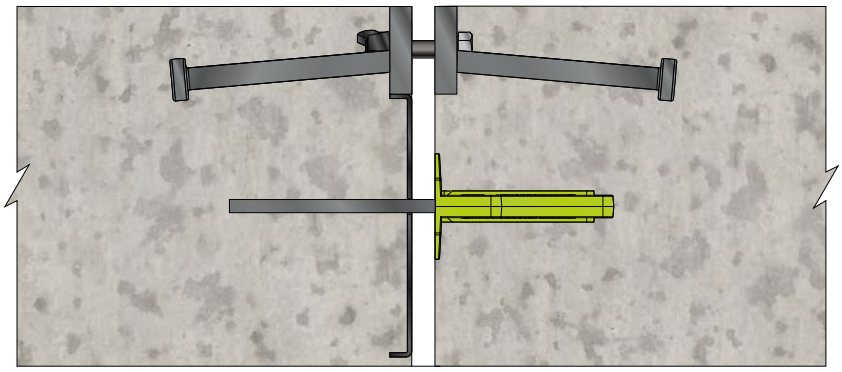

Available in Plain Steel, Hot Dip Galvanized finish, or Stainless Steel versions, which means that the TERAJOINT® system offers a solution for all operational environments.

The TERAJOINT® system range includes a selection of prefabricated intersections, including “T” sections, “X” sections, and rounded “R” sections.

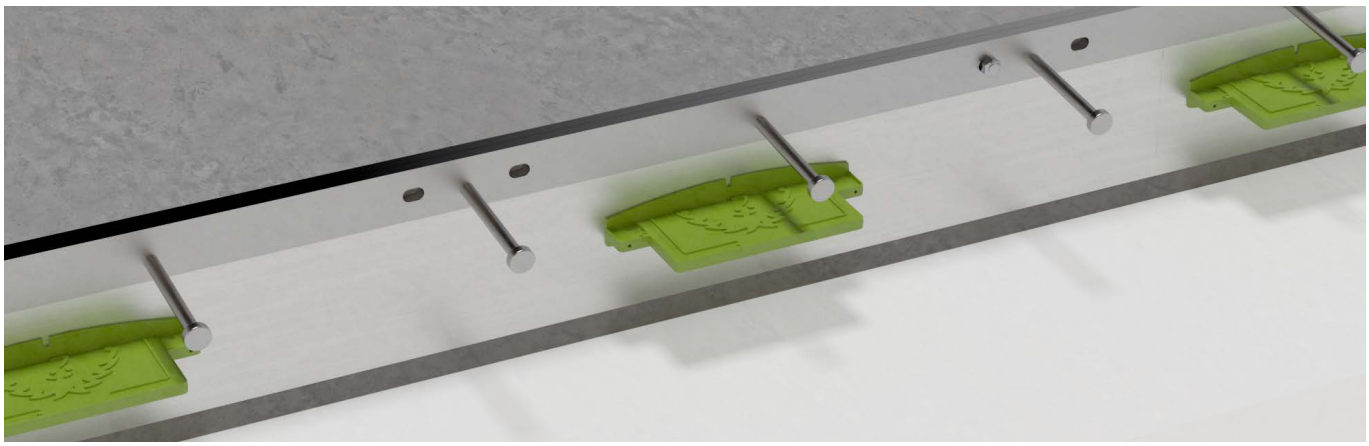

peikko®

www.peikko.com

CONTENTS

About TERAJOINT® Free Movement Joint

1. Product Properties

TERAJOINT® is a prefabricated leave-in-place joint system designed to create (/construct) formed shrinkage free movement joints, consisting of heavy-duty arris armoring, permanent formwork, and a load transfer system. The arris armoring is provided by 40 × 10 mm cold drawn steel profiles, which are connected by yieldable plastic bolts. The profiles are anchored into the slab utilizing a number of 10 × 100 mm welded anchors, and one of the profiles is welded onto the steel divider plate, which has the load transfer system positioned and attached to it.

TERAJOINT® can be used even in the highest floor class FM1[1], where very high standards of flatness and levelness are required. Floor class FM1 allows reaching trucks operating at above 13 m without side-shift.

[1] See TR34 Concrete Industrial Ground Floors 4th, Ed. *Table 3.1.*

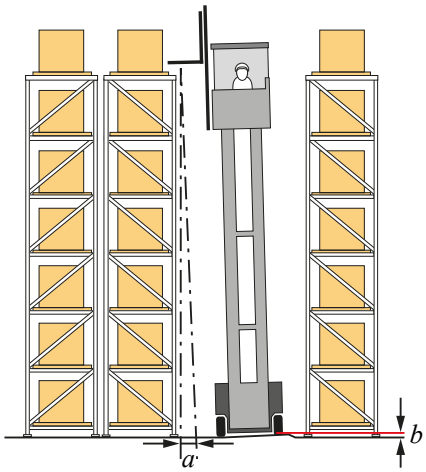

Figure 1. Static lean (a) because of variation in floor level (b).

TERAJOINT® is installed into position on the sub-base at the correct height before the slab is cast. Once the concrete is cast, the shrinkage forces generated by the drying concrete slabs cut the plastic bolts connecting the two steel profiles, which causes the joint to open. TERAJOINT® permits the minor free slab movements, caused by drying shrinkage and thermal variations in both longitudinal and perpendicular directions of the slab plane.

TERAJOINT® transfers vertical loads between adjacent slabs and minimizes vertical displacement of the slabs. The load transfer system is accomplished by utilizing high-strength steel discrete plate dowels, moving within rigid plastic release sleeves.

TERAJOINT® with rectangular TDR 6 dowels is designed for moderate loading and maximum 20 mm openings.

TERAJOINT® with rectangular TDR 8 or TDR 12 dowels is designed for higher loads and bigger openings.

The limiting factor of load transfer in most cases is the punching shear resistance of the concrete. These resistances can be found in section 2. It is recommended that no more than 50% of the applied load should be transferred by the load transfer system and the slab itself should be designed to carry the rest of the load.

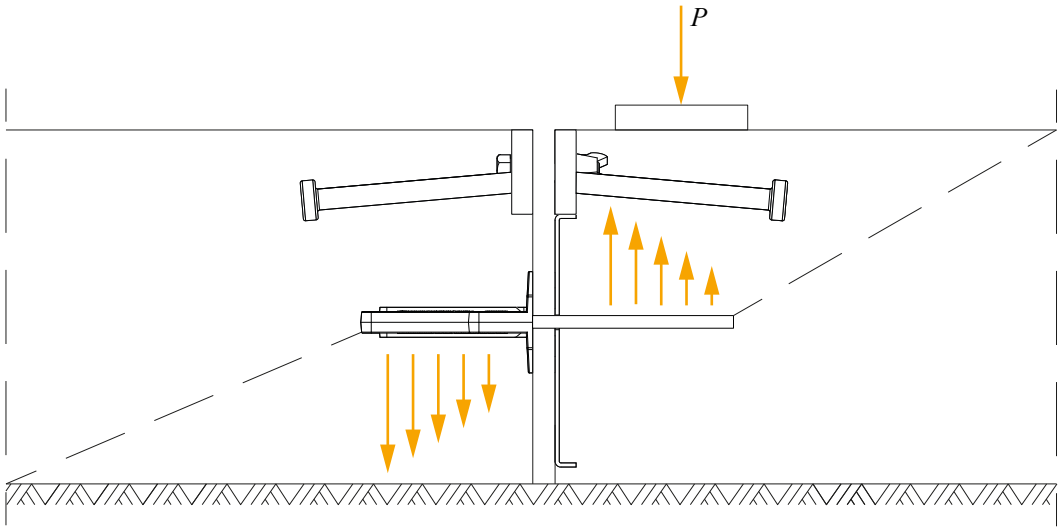

Figure 2. Load transfer.

Table 1. TERAJOINT® Dowel Types.

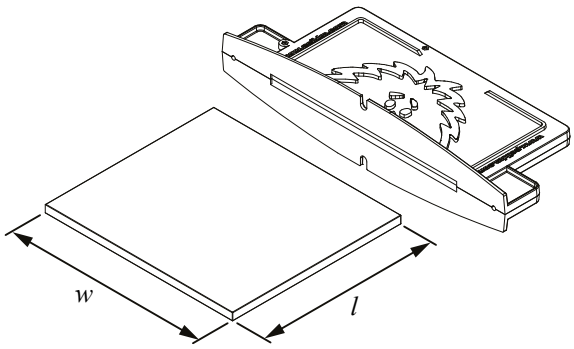

Dowel Type	TERADOWEL Rectangular 6 mm TDR-6
Thickness	6 mm
Dimensions $w \times l$	150 mm x 135 mm
Sleeve Color	Green
Advisable Joint Opening	0 ~ 20 mm

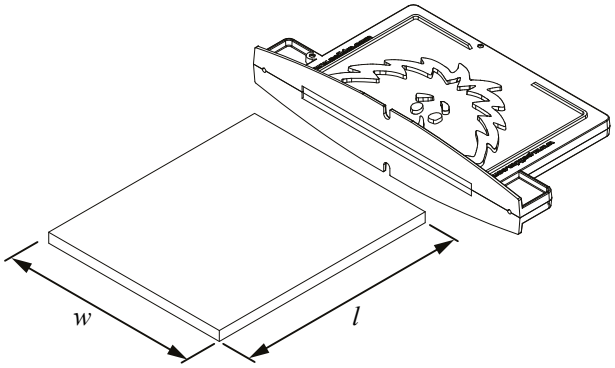

Dowel Type	TERADOWEL Rectangular 8 mm TDR-8
Thickness	8 mm
Dimensions $w \times l$	145 mm x 175 mm
Sleeve Color	Black
Advisable Joint Opening	0 ~ 30 mm

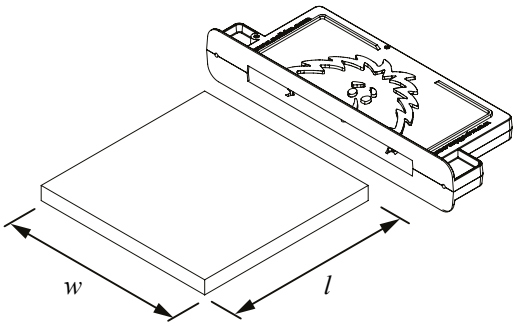

Dowel Type	TERADOWEL Rectangular 12 mm TDR-12
Thickness	12 mm
Dimensions $w \times l$	150 mm x 150 mm
Sleeve Color	Blue
Advisable Joint Opening	0 ~ 30 mm

1.1 Materials and Dimensions

1.1.1 Materials

Table 2. Materials and standards of TERAJOINT® TJS6, TJS8, and TJS12.

Version	Top Rails + Anchors	Divider Plate	Plate Dowels	Shear Connectors	Sleeves
TERAJOINT®	Q235B	SPCC	Q355B	SWRCH15A	ABS/HDPS
TERAJOINT® HDG	Q235B HDG	SPCC HDG	Q355B HDG	SWRCH15A HDG	ABS/HDPS
TERAJOINT® Stainless	304	SPCC HDG	Q355B HDG	SWRCH15A	ABS/HDPS
TERAJOINT® Acid Proof	316	316	316	304	ABS/HDPS
HDG = Hot dip galvanized. The standard for black steel.					

Table 3. TERAJOINT® versions and suitable environmental conditions.

Version	Environmental condition
TERAJOINT®	Dry internal
TERAJOINT® HDG	Occasionally wet
TERAJOINT® Stainless	Water + aesthetically demanding
TERAJOINT® Acid Proof	Salt/water/acid + aesthetically demanding

1.1.2 Dimensions

Table 4. Dimensions [mm] of TERAJOINT® TJS6, TJS8, and TJS12.

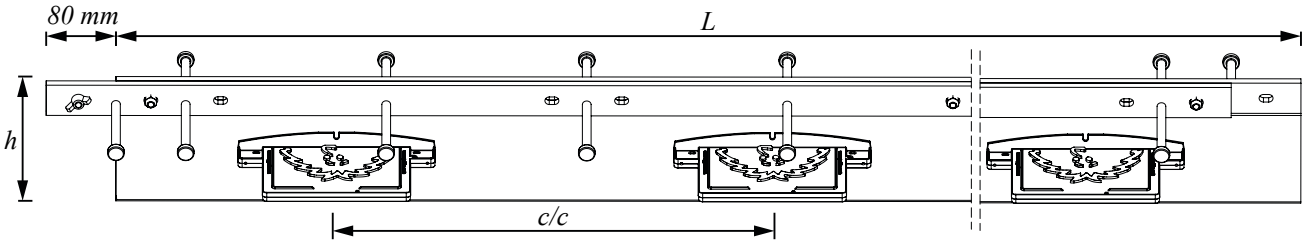

Type	Height *h*	Dowel Type	Dowel Centers *c/c*	Length *L*	Weight [kg]	Adjustable Slab Depth *	Sleeve Color
TJS6-90-3000	90 mm				29.9	100 ~ 120 mm	
TJS6-115-3000	115 mm				31.1	125 ~ 145 mm	
TJS6-135-3000	135 mm				32.0	145 ~ 170 mm	
TJS6-145-3000	145 mm				32.5	155 ~ 170 mm	
TJS6-160-3000	160 mm	TDR-6	500 mm	3000 mm	33.2	170 ~ 195 mm	Green
TJS6-185-3000	185 mm				34.3	195 ~ 225 mm	
TJS6-215-3000	215 mm				35.7	225 ~ 250 mm	
TJS6-230-3000	230 mm				36.4	245 ~ 270 mm	
TJS6-245-3000	245 mm				37.1	260 ~ 300 mm	
TJS8-135-3000	135 mm				36.0	145 ~ 170 mm	
TJS8-145-3000	145 mm				36.3	155 ~ 170 mm	
TJS8-160-3000	160 mm				37.1	170 ~ 195 mm	
TJS8-185-3000	185 mm	TDR-8	500 mm	3000 mm	38.3	195 ~ 225 mm	Black
TJS8-215-3000	215 mm				39.7	225 ~ 250 mm	
TJS8-230-3000	230 mm				40.4	245 ~ 270 mm	
TJS8-245-3000	245 mm				41.4	260 ~ 300 mm	
TJS12-135-3000	135 mm				37.7	145 ~ 170 mm	
TJS12-145-3000	145 mm				38.3	155 ~ 170 mm	
TJS12-160-3000	160 mm				38.9	170 ~ 195 mm	
TJS12-185-3000	185 mm	TDR-12	500 mm	3000 mm	40.1	195 ~ 225 mm	Blue
TJS12-215-3000	215 mm				41.5	225 ~ 250 mm	
TJS12-230-3000	230 mm				42.1	245 ~ 270 mm	
TJS12-245-3000	245 mm				42.9	260 ~ 300 mm	

If the height or dowel spacing requirements are different from those indicated in *Table 4*, Peikko Technical Support will design TERAJOINT® with a custom height and dowel spacing upon request.

Table 5. Dimensions [mm] of TERAJOINT® X-Junction.

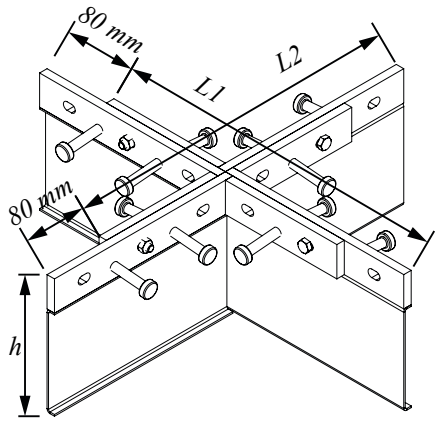

Type	Height *h*	Width *L1*	Width *L2*	Weight [kg]
TJX-90	90 mm	400 mm	400 mm	6.3
TJX-115	115 mm			6.7
TJX-135	135 mm			7.0
TJX-145	145 mm			7.2
TJX-160	160 mm			7.4
TJX-185	185 mm			7.8
TJX-215	215 mm			8.2
TJX-230	230 mm			8.5
TJX-245	245 mm			8.7

Table 6. Dimensions [mm] of TERAJOINT® T-Junction.

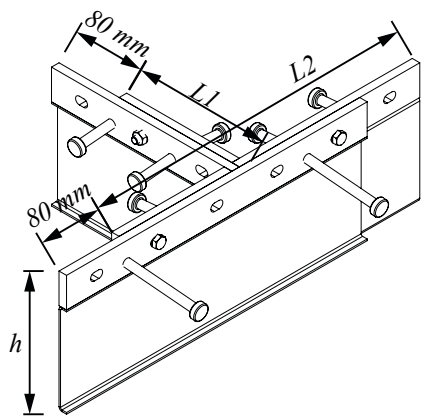

Type	Height *h*	Width *L1*	Width *L2*	Weight [kg]
TJT-90	90 mm	160 mm	400 mm	4.9
TJT-115	115 mm			5.3
TJT-135	135 mm			5.6
TJT-145	145 mm			5.8
TJT-160	160 mm			5.9
TJT-185	185 mm			6.3
TJT-215	215 mm			6.7
TJT-230	230 mm			6.9
TJT-245	245 mm			7.1

Modified X and T-junctions including X and T-junctions with dowels can be supplied upon request.

Table 7. Dimensions [mm] of TERAJOINT® R-Section.

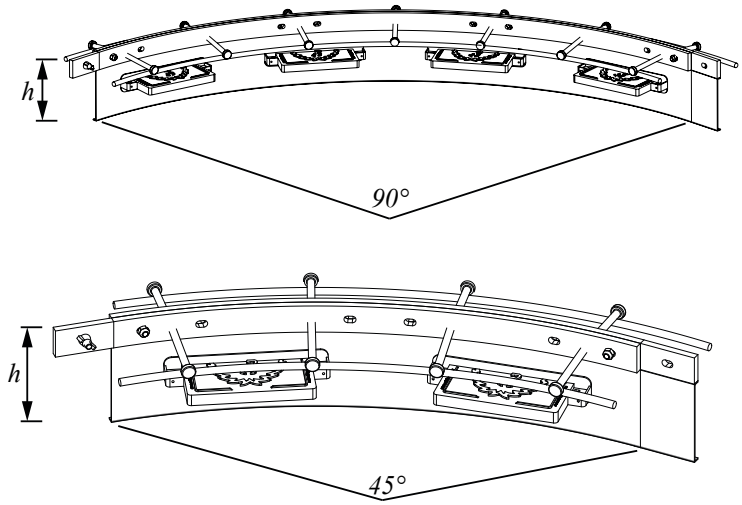

Type	Angle	Radius
TJR6-90	45°, 90°	600 mm, 900 mm or more
TJR6-115		
TJR6-135		
TJR6-145		
TJR6-160		
TJR6-185		
TJR6-215		
TJR6-230		
TJR6-245		
TJR8-135		
TJR8-145		
TJR8-160		
TJR8-185		
TJR8-215		
TJR8-245		
TJR12-135		
TJR12-145		
TJR12-160		
TJR12-185		
TJR12-215		
TJR12-230		
TJR12-245		

Note: TERAJOINT® R-Sections are not standard products to be stored.
Peikko technical support can design TERAJOINT® rounded sections in different angles or according to project requirements.

TERAJOINT® with foam

Peikko can deliver TERAJOINT® with foam to the places where slabs are cast in the cool condition or thermal expansion is significant. The thickness of the foam (t_f) can be 10 / 20 mm.

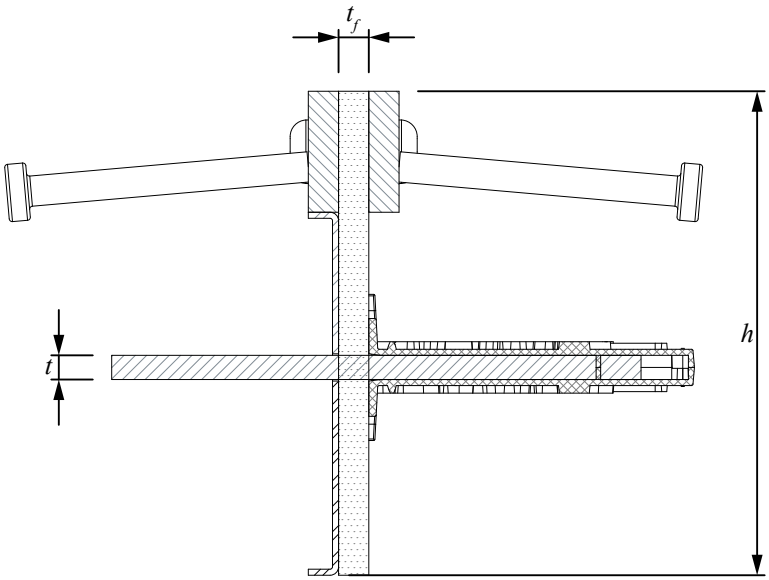

1.2 Quality

Peikko Group's production units are externally controlled and periodically audited based on production certifications and product approvals by various independent organizations

2. Resistances

Resistances of the TERAJOINT® dowels are determined according to UK Concrete Society TR34.4 published August 2013.

Table 8. Load transfer and required verifications for single plate dowels.

Load transfer	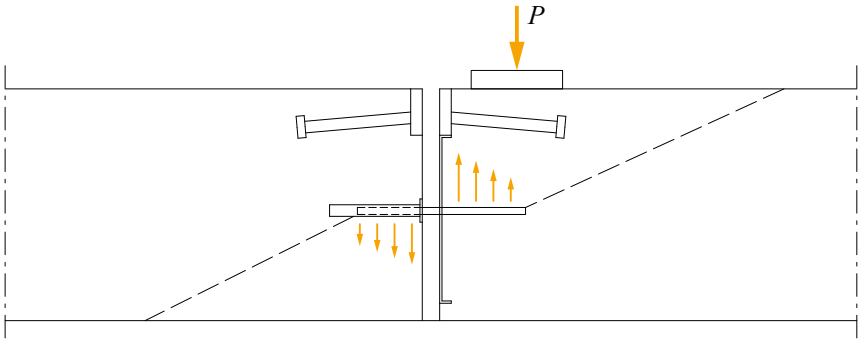
Punching shear at the face of the loaded area	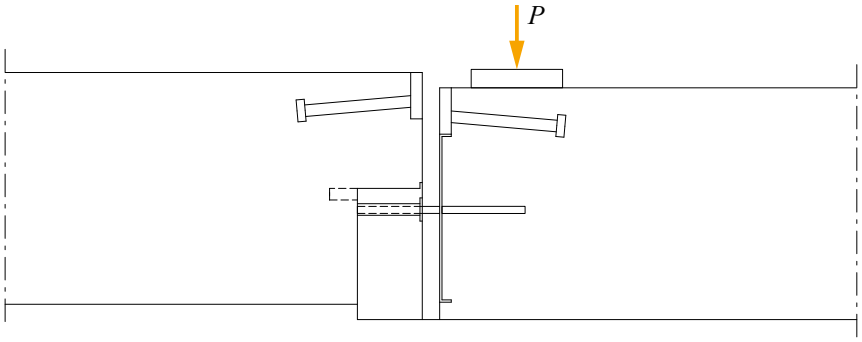
Punching shear on the critical perimeter	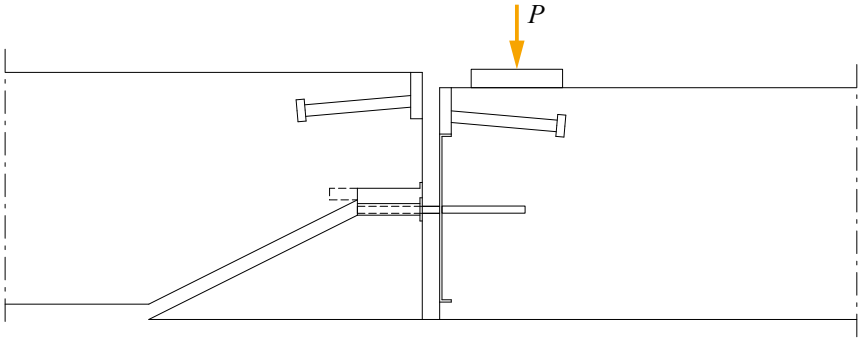
Bearing/bending capacity of dowel	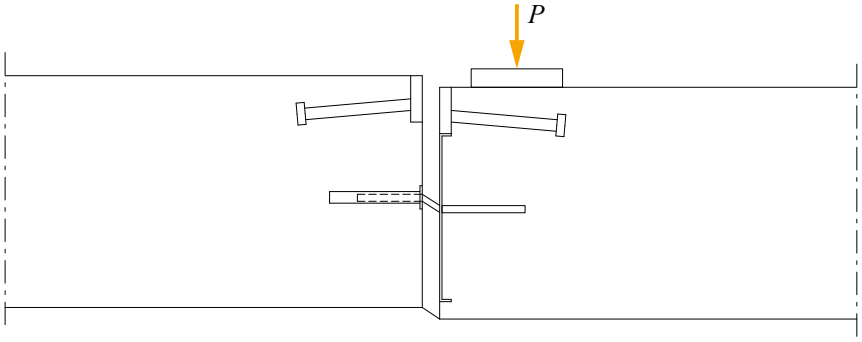
Shear capacity of dowel	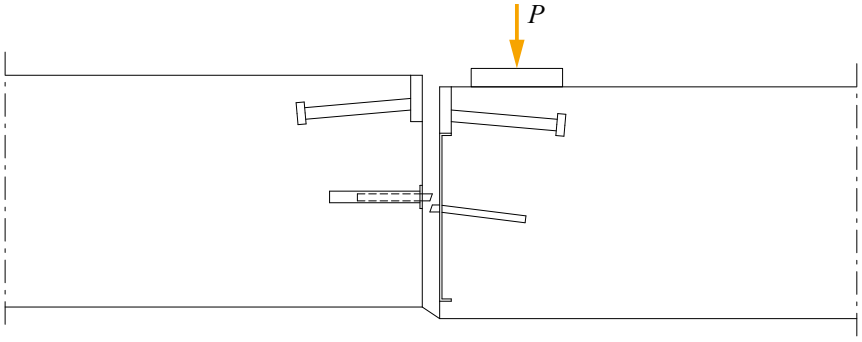

Table 9. Design resistance of single dowel in shear P_{sh} and bearing/bending $P_{max,plate}$ [kN] according to TR34.4 for C32/40.

Dowel Type	Joint Opening x	Shear P_{sh}	$P_{max,plate}$
TDR 6	20 mm	150.0	35.2
TDR 8	30 mm	193.4	41.5
TDR 12	30 mm	300.1	85.7

Table 10. Design resistance [kN/m] for TERAJOINT® TJS6 according to TR34.4 for 20 mm joint opening.

Slab Thickness	C25/30	C28/35	C30/37	C32/40	C35/45
100 mm	21.0	22.2	23.0	23.8	24.9
150 mm	36.8	38.9	40.3	41.6	43.5
200 mm	50.8	53.7	55.6	57.4	60.1
250 mm	68.0	69.1	69.8	70.4	71.3

Table 11. Design resistance [kN/m] for TERAJOINT® TJS8 according to TR34.4 for 30 mm joint opening.

Slab Thickness	C25/30	C28/35	C30/37	C32/40	C35/45
150 mm	38.5	40.8	42.2	43.6	45.6
200 mm	52.3	55.3	57.3	59.1	61.8
250 mm	71.4	75.6	78.2	80.8	83.9

Table 12. Design resistance [kN/m] for TERAJOINT® TJS12 according to TR34.4 for 30 mm joint opening.

Slab Thickness	C25/30	C28/35	C30/37	C32/40	C35/45
150 mm	36.2	38.3	39.6	40.9	42.8
200 mm	50.4	53.3	55.2	57.0	59.6
250 mm	69.2	73.2	75.8	78.2	81.8

Design resistance [kN/m] covers all required verifications listed in *Table 9*.

The punching shear resistances are calculated for plain concrete without any kind of additional reinforcement and according to TR34.4 the same approach should also be used for steel and macro-synthetic fiber reinforced concrete.

If resistances for other joint openings or concrete grades, or other slab thicknesses are needed, please contact Peikko Technical Support.

Selecting TERAJOINT® Free Movement Joint

TERAJOINT® is selected according to following criteria:

- **Slab depth.** It is recommended that the joint depth, TERAJOINT® height, is at least 10 mm shallower than the slab depth. Advisable slab depths are stated in *Table 4*.
- **Designed joint opening.** For joint openings of up to 20 mm wide, we recommend TERAJOINT® TJS6. For joint openings from 20 to 30 mm wide, TERAJOINT® TJS8 is recommended. Whereas for pile-supported slabs, we would only recommend the use of TERAJOINT® TJS8 or TJS12.
- **Environment.** For internal floors, we would suggest the plain steel TERAJOINT® version. When corrosion resistance is required, TERAJOINT® HDG (Hot Dipped Galvanized) version is recommended, and for a more aggressive external environment or high hygienic requirement, TERAJOINT® in Stainless Steel is recommended. For an extremely corrosive environment such as coastal salty or acidic, TERAJOINT® Acid Proof is recommended, which is manufactured from a high corrosion resistance grade of Stainless Steel (316).
- **20 mm designed joint opening.** This refers generally to typical large bays. A wider joint opening is possible, but resistances must be reduced accordingly, however, this is not practical due to the increase of dynamic impact during the joint transition. If there is a design requirement for wider joint openings, please contact Peikko Technical Support.
- **Joint aspect ratio.** Individual slabs should ideally have an aspect ratio of 1:1; this may not always be possible, but the ratio should never exceed 1:1.5.
- **Use of TERAJOINT® R-sections (curved).** These are recommended to avoid sharp corners in the floor slab where cracking would normally be expected.

A further recommendation is to separate fixed elements from the slab with the use of an flexible compressible foam filler, with a thickness of at least 20 mm, also by avoiding re-entrant corners and avoiding point loads at joints.

Annex A – TERAJOINT® Design form

Basic dimensions

Thickness of the slab h_{slab} =		mm	
Joint opening x =		mm	(recommended value 0 ~ 20 mm, maximum allowed value 30 mm)
Pre-opening of joint: Thickness of foam t_f =		mm	(default value 0 mm, available 10/20 mm)
Type of Peikko flooring product =			**TERAJOINT**® for joint opening ≤ 20 mm or ≤ 30 mm depending on the dowel
Maximum length of slab A_{max} =		m	(maximum length of slab perpendicular to TERAJOINT® connection) - maximum A_1 or A_2
Difference of temperatures of slab Δt =		°C	Example 1: +10°C to -15°C ⇨ t = -25°C Example 2: +10°C to 40°C ⇨ t = 30°C

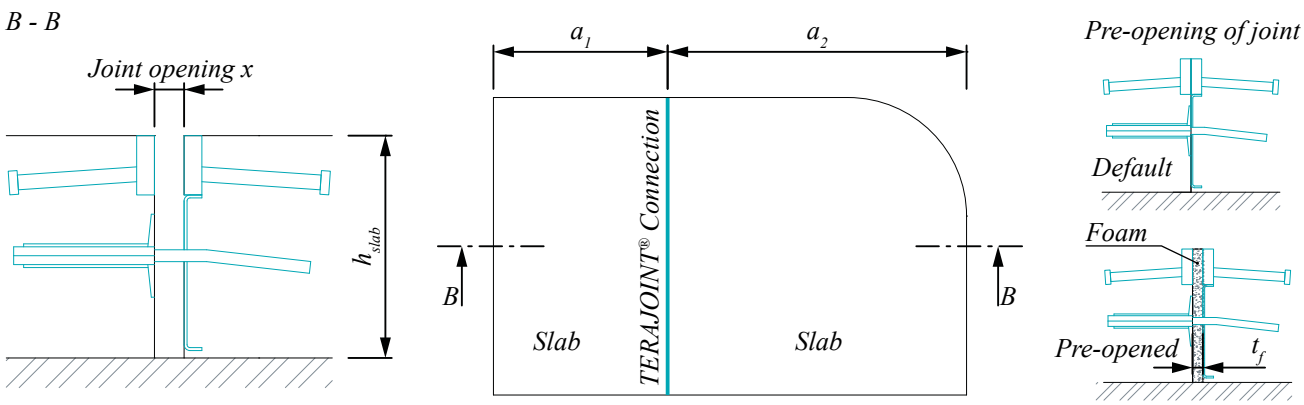

Material options

Concrete grade of slab =			C20/25 ~ C40/50
Partial safety factor for concrete γ_c =			recommended value = 1.50
Version of TERAJOINT® =			Standard, HDG, Stainless or Acid proof
Partial safety factor for steel γ_s =			recommended value = 1.15
Modulus of subgrade reaction k =		N/mm³	(based on soil type)

Soil type	k value [N/mm³]	
	Lower value	Upper value
Fine or slightly compacted sand	0.015	0.030
Well compacted sand	0.050	0.100
Very well compacted sand	0.100	0.150
Loam or clay (moist)	0.030	0.060
Loam or clay (dry)	0.080	0.100
Clay with sand	0.080	0.100
Crushed stone with sand	0.100	0.150
Coarse crushed stone	0.200	0.250
Well compacted crushed stone	0.200	0.300

Loads

Permanent loads

Characteristic permanent load g_k =		kN/m^2	
Partial safety factor for permanent load γ_g =			Recommended value = 1.35

Imposed loads

Characteristic imposed load q_k =		kN/m^2	
Partial safety factor for imposed load γ_q =			recommended value = 1.50

Point load

Characteristic value of point load Q_p =		kN	
Partial safety factor for point load γ_{Qp} =			recommended value = 1.50

Dynamic loads (forklift)

Partial safety factor for dynamic load γ_{Qk} =			recommended value = 1.60
Dynamic magnification factor φ =			value 1.4 for pneumatic tires and value 2.0 for solid tires
Characteristic axle load of forklift Q_k =		kN	based on type of forklift (FL 1~6)
Width of contact area =		mm	recommended value 200 mm
Distance between middle of contact areas a =		mm	based on type of forklift (FL 1~6)

Class of forklifts	Axle load Q_k [kN]	Net weight [kN]	Hoisting load [kN]	Width of axle a [mm]	Overall width b [mm]	Overall length l [mm]
FL 1	26	21	10	850	1000	2600
FL 2	40	31	15	950	1100	3000
FL 3	63	44	25	1000	1200	3300
FL 4	90	60	40	1200	1400	4000
FL 5	140	90	60	1500	1900	4600
FL 6	170	110	80	1800	2300	5100

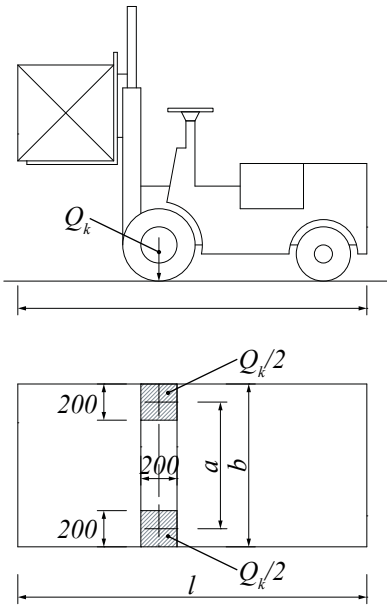

Installing TERAJOINT® Free Movement Joint

General

The handling of TERAJOINT® Free Movement Joints must be done by following safety instructions. The free movement joints on-site must be protected from weather, damage during handling, and possible damage during removal on the packing. Joints should be stored in dry and sheltered conditions.

Before use, the free movement joints shall be inspected visually for completeness and any signs of damage that might have occurred during transport or storage.

The assessment of the products is based on the assumption that during the estimated working life no maintenance is required, though regular checks should be carried out on the slab surface to ensure that any damage is detected and repaired as soon as possible. In case of a repair, it is necessary to assess mechanical resistance.

Installation tolerances

Joints should be installed as precisely vertical as possible and checked with a spirit level to ensure the proper function of the dowels during slab movement. The levelness and straightness of the joint installation should be according to the relevant requirements of the floor slab design and again checked using a standard laser level device or optical sight level.

Installation

Step 1. Sub-base level

The sub-base must be made as accurate and level as possible to the requirements on the slab drawing. The tolerance of the level must be considered when ordering joints. Typically, the joint height will be 10 mm to 35 mm less than the slab depth.

Step 2. Joint location

The required layout, position, and height of the joints will be specified on the floor slab drawing which must be followed closely. String or laser lines are placed to identify the position of joints according to the slab layout dimensioned drawings.

Step 3. Joint Installation

1. Joints are placed sequentially away from junction pieces or vertical column/wall.
    a. If Junction pieces are used the first joint is connected to the junction piece at the overlap section using a dowel bush, plastic bolt and steel nut.
    b. If junction pieces are not used, the first joint is placed adjacent to the column or wall allowing for isolation material. The connection overlap of TERAJOINT® must be cut away.

2. The joints are placed in the correct position according to the string line, and the height is adjusted. The height should be verified by laser level or similar at both ends, and the joint should be set vertical using a spirit level that can be placed across the top edges.

If required by the design, ‘X’ or ‘T’ junctions should be placed according to the required layout and set to the correct height using a laser level or equivalent.

The junction pieces are placed in the correct position and the height is adjusted. The height should be verified by laser level and the junction should be set horizontal using a spirit level in two perpendicular directions. The junction pieces can then be fixed in position using pins as described in section 3.

3. The joint can then be fixed in position using pins. Fixing pins should be 14 mm – 16 mm diameter and at least 300 mm longer than the joint height. A good practice is to use 14 × 600 mm fixing pins.

   For slabs up to 200 mm deep, 4 pins per joint are required, (up to 300 mm 6 pins per joint). The pins should be spaced equally along one side of the joint, on the opposite side to the first pour. Pins should always be placed so they finish level with studs of TERAJOINT® top strips. Any excess pins above the level of studs shall be removed before pouring. After the concrete has hardened to keep TERAJOINT® in position, before pouring the second side, pins must be cut off. It is important to cut pins from ground level or remove them from soil completely reducing any restraint to joint opening.

   Pins can be simply driven into place with a suitable impact gun or hammer.

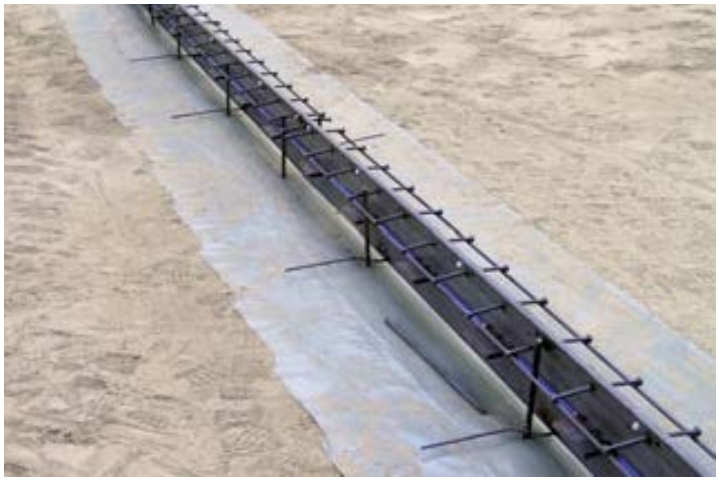

4. As an alternative; TFX Installation Device can be used for TERAJOINT® installation. TFX is a simple to use 'jack' that not only fully supports the floor joints during set-up and pouring of concrete but also allows precise adjustment of the joint height which is critical for high-quality concrete floor slabs. The only TFX is recommended for installation of TERAJOINT® on top of insulation material (for example at cold storage projects). TFX Installation Device is a re-usable item.

5. Subsequent joints are aligned, fixed at the overlap using dowel bushes, plastic bolts, and nuts, adjusted and fixed in the same manner. The joints should be fixed so that the ends of adjacent top strips are not touching but have a clearance gap of between 1 mm and 2 mm to allow for longitudinal movement.

6. The final joint in any run will usually require being cut to length. The gap between the column/wall and the penultimate joint is measured taking into account suitable isolation material. The final joint is cut to length and installed in the same manner as previous joints.

7. If the joint layout requires a run of joints between two junction pieces and the distance between them is not a full multiple of 3 meters, then a cut joint in the run will be necessary. Joints should be placed running from the junction pieces to some point approximately equidistant from both when the gap is less than 3 m.

   The gap should be measured accurately between the top strips. The final joint should have a section cut from the center equal to the distance between the joints, keeping both overlap sections at the ends intact. The two pieces are then installed in the usual manner to each side of the gap and simply butt-welded together at the joint.

   Note: Do not weld two adjacent sides of top strips together! Side welds of top strips only.

Step 4. Pouring concrete

Once TERAJOINT® is correctly positioned, pouring the concrete can commence. Concrete should be poured to the top level of the TERAJOINT® with attention to consolidation around the dowels and sleeves. All plate-type dowels require close attention to filling around the dowels to eliminate the possibility of air entrapment. This should be done with a suitable vibrating poker.

INSTALLING

After the concrete on one side has hardened to keep TERAJOINT® in position, before pouring the second side, pins must be cut off. It is important to cut pins at ground level or remove them from soil completely reducing any restraint to joint opening.

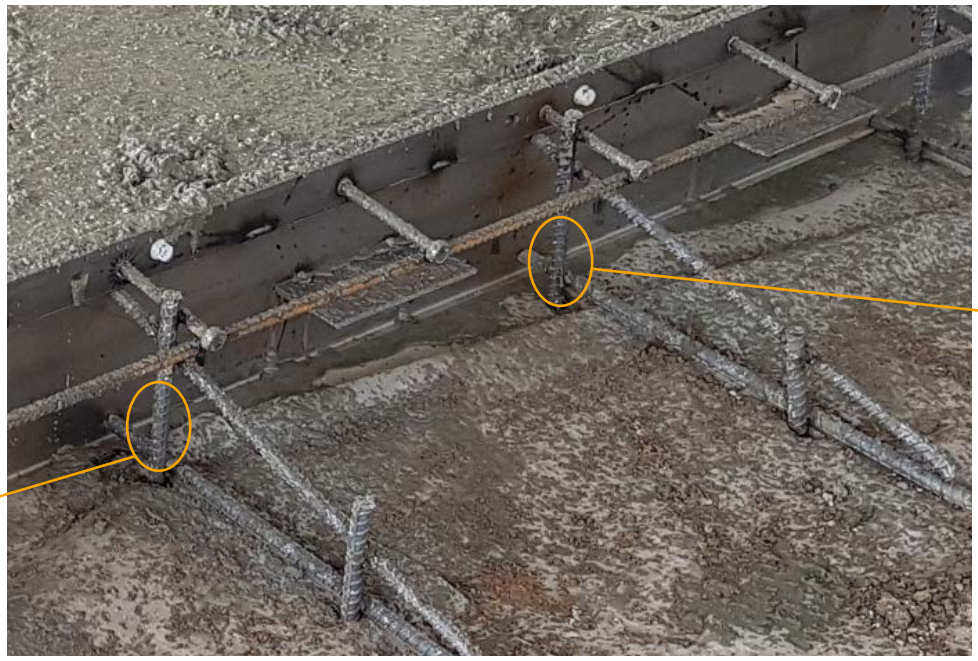

NOTES

Technical Manual Revisions

Version: APAC 10/2022. Revision: 003

- Table 2. Materials updated.
- TERAJOINT® foam added (closed cell polyethylene).
- Tables 11 - 14. Captions amended.
- Appendix A. Design form amended.
- Added General section to Installation.
- A removed paragraph from item 3 of Step 3 in the installation section.
- Dowel types changed/added.
- TERAJOINT® types added and updated.
- Resistances updated.

Version: APAC 12/2018. Revision: 002

- Dowel Resistance tables updated
- Illustration updates for clarity
- Updated layout to latest branding

Version: APAC 08/2017. Revision: 001*

- New cover design for 2018 added

Resources

DESIGN TOOLS

Use our powerful software every day to make your work faster, easier and more reliable. Peikko design tools include design software, 3D components for modeling programs, installation instructions, technical manuals, and product approvals of Peikko's products.

peikko.com/design-tools

TECHNICAL SUPPORT

Our technical support teams around the world are available to assist you with all of your questions regarding design, installation etc.

peikko.com/technical-support

APPROVALS

Approvals, certificates and documents related to CE-marking (DoP, DoC) can be found on our websites under each products' product page.

peikko.com/products

EPDS AND MANAGEMENT SYSTEM CERTIFICATES

Environmental Product Declarations and management system certificates can be found at the quality section of our websites.

peikko.com/qehs

COMPANY WITH
MANAGEMENT SYSTEM
CERTIFIED BY DNV
ISO 9001 • ISO 14001
ISO 45001